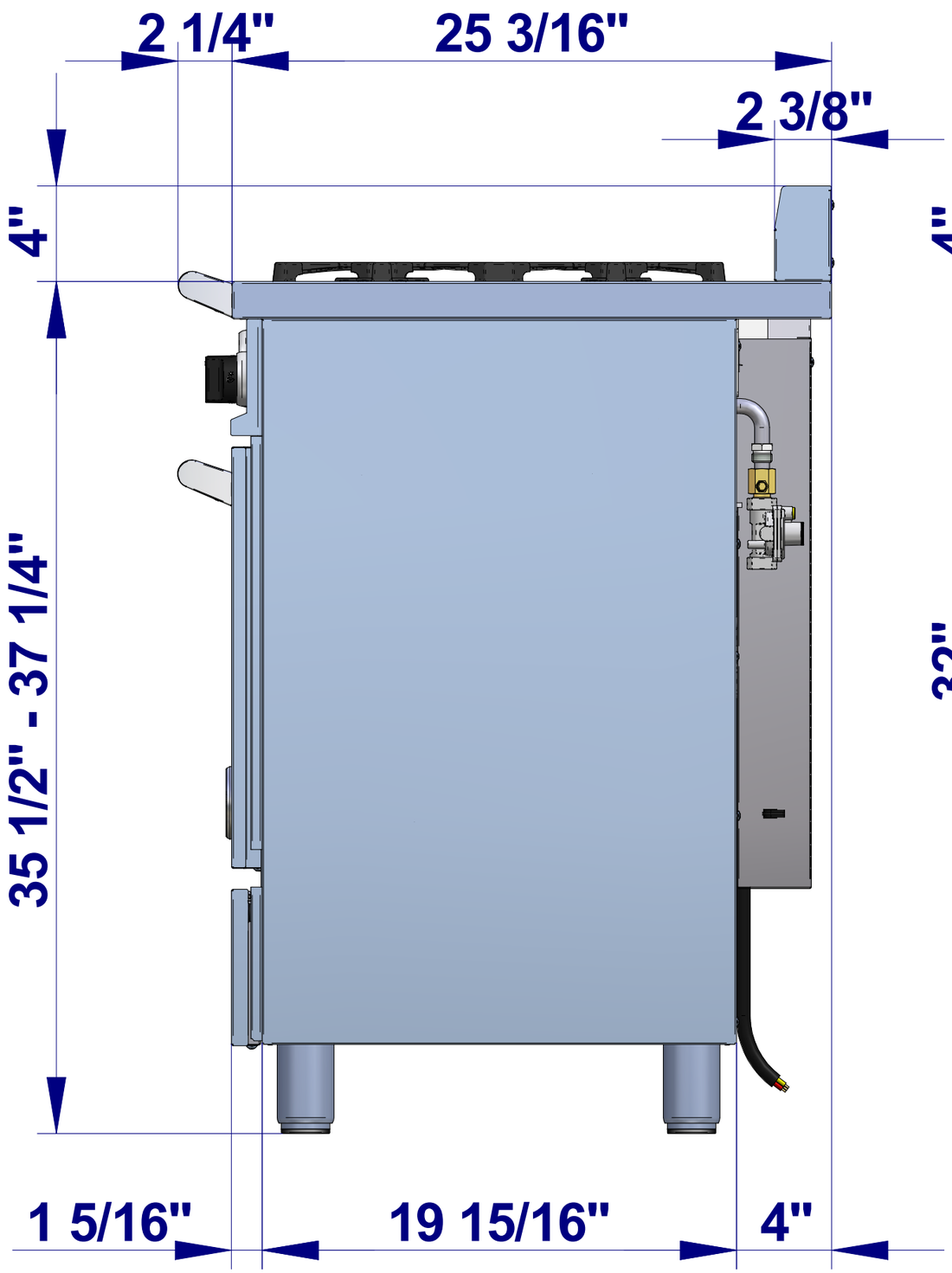

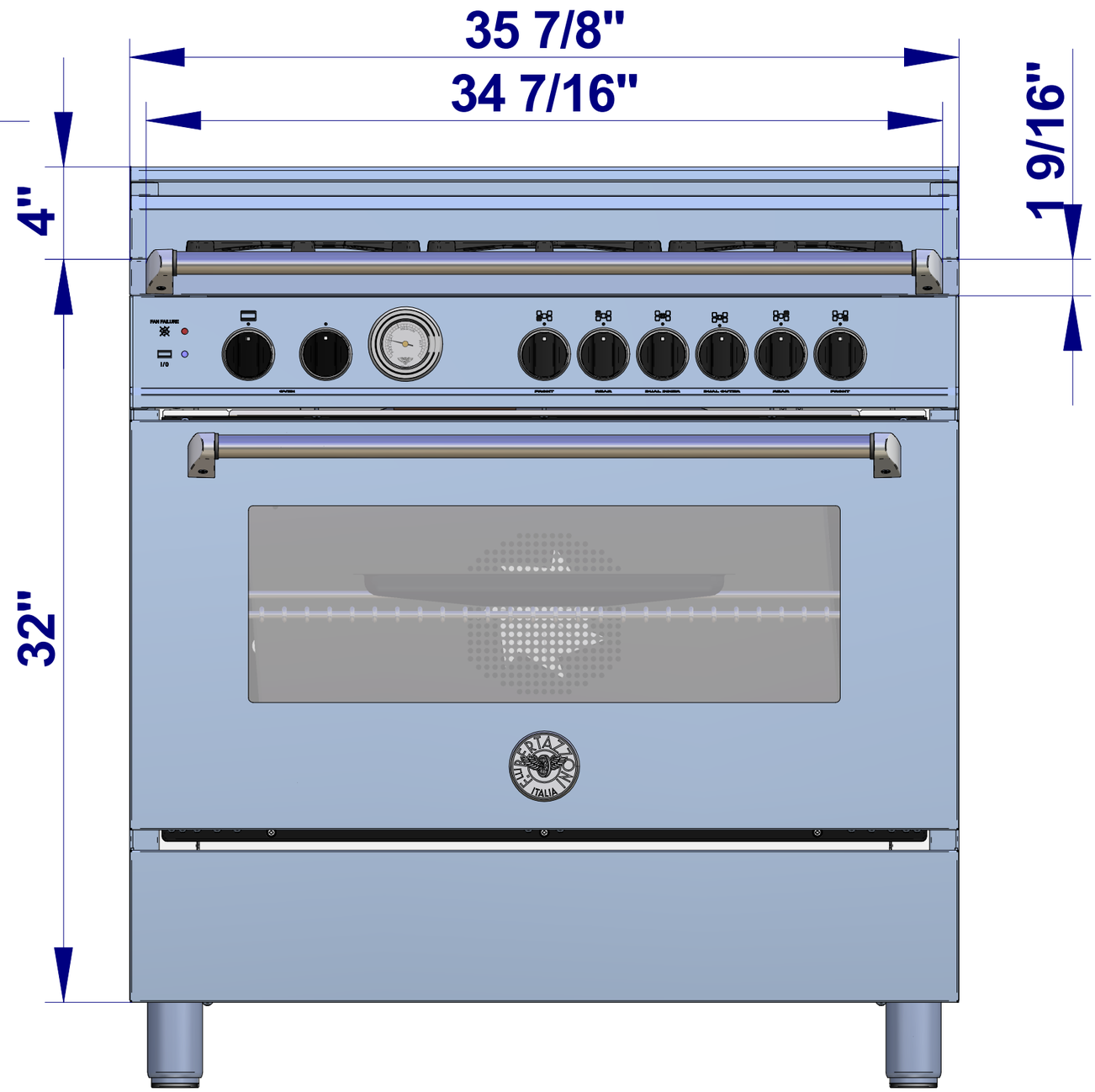

Rendering shown is applicable for both the 36” XT and the 36” XE