**VCQDD1 MODEL**

VENMAR | CHEF

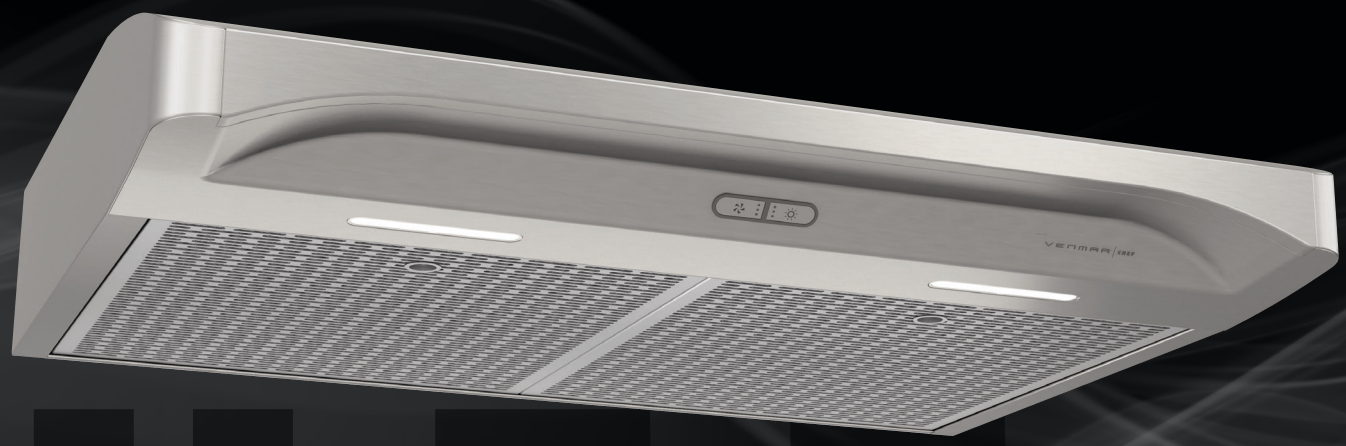

# Captur™

**EXCLUSIVE SYSTEM**
**Provides faster smoke & odor removal**

5 YEAR WARRANTY · 5 ANS DE GARANTIE

## UNDER CABINET RANGE HOOD

Cooking enthusiasts and experts alike love the superior performance, refined look, and thoughtful details that set Venmar Chef products apart. This model is sure to win over even the most demanding users with its innovative design, advanced technology, and unmatched performance.

## INNOVATIVE AND STYLISH

- 3-speed performant blower, HVI* certified
- Quieter range hood offering a sound level of 1.2 sones at low speed
- Two deluxe high efficiency micro filters, easy to clean
- Two built-in LED modules provide an even lighting over the cooktop
- Use charcoal filter HPF30 for a non-ducted installation
- EZ 1 brackets make it easy for single-person installation in less than half the time of traditional methods

**3-SPEED TAP-TOUCH CONTROL**

**LED 2L — 2-LEVEL LIGHTING**

**TWO DELUXE HIGH EFFICIENCY MICRO FILTERS**

**FILTER CLEAN REMINDER**

### SPECIFICATIONS

| WIDTH | MODEL | COLOR | VOLTS | AMPS | CFM | SONES (MIN./MAX.) | DUCTING |
|---|---|---|---|---|---|---|---|
| 30" | VCQDD130SS | STAINLESS STEEL | 120 | 0.65 | 300 | 1.2/5.5 | 3 ¼" X 10" (H-V) 7" ROUND (V) |
| 30" | VCQDD130BLS | BLACK STAINLESS STEEL | 120 | 0.65 | 300 | 1.2/5.5 | 3 ¼" X 10" (H-V) 7" ROUND (V) |
| 30" | VCQDD130WW | WHITE | 120 | 0.65 | 300 | 1.2/5.5 | 3 ¼" X 10" (H-V) 7" ROUND (V) |

### OPTIONS

| | |
|---|---|
| HPFA3A30 | REPLACEMENT FILTERS |
| HPF30 | CHARCOAL REPLACEMENT FILTERS |
| HAWRK3 | ADA WIRING KIT (AVAILABLE SOON) |

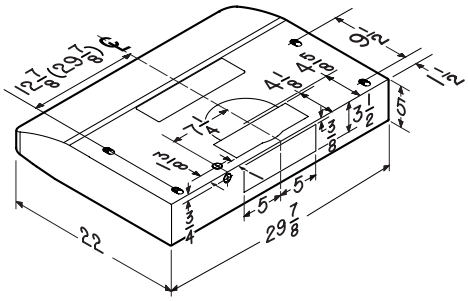


LED 3 YEAR WARRANTY ANS DE GARANTIE

2100 HVI CERTIFIED

*THE HVI (HOME VENTILATING INSTITUTE) CERTIFIES THE PERFORMANCE OF NORTH AMERICAN HOME VENTILATING PRODUCTS. IF A RANGE HOOD IS NOT HVI CERTIFIED, THERE ARE NO GUARANTEES REGARDING ITS PERFORMANCE.

550 Lemire Blvd
Drummondville (Quebec) J2C 7W9
**1-800-567-3855**
www.venmar.ca

91662B 08/17