Use & Care Manual

BRIGADE™

Viking Range Corporation
111 Front Street
Greenwood, Mississippi 38930 USA
(662) 455-1200

For product information,
call 1-888-845-4641

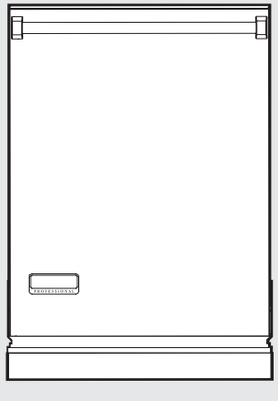

301 Series Built-In Dishwashers

F21130 EN (030113)

Congratulations

Your dishwasher is designed to offer years of reliable service. This Use & Care Guide will provide you with the information you need to become familiar with your dishwasher's operation and care.

Your complete satisfaction is our ultimate goal. If you have any questions or comments about this product, please contact the dealer from whom you purchased it, or contact our Consumer Support Center at 1-888-846-4641.

For more information about the complete and growing selection of products, contact your dealer, or visit online at www.brigade.ca

Table of Contents

Getting Started

Important Safety Instructions 4
Warnings & Safety 6
Features 8

Product Controls

Features: Cycles 10
Cycle Data 12
Preparing Dishes 13

Operation

Changing a Program 14
Washing Recommendations 15
Rack Adjustments 17
Loading the Dishwasher 18
Loading Silverware Basket 19
Loading Racks (10 Place Setting) 20
Dishwasher Detergent 22
Rinse Agent 23
Energy Saving Tips 24
Wash Temperature 24
Water Hardness 25

Product Care

Maintenance 26
Troubleshooting 28
Troubleshooting/Fault Codes 34
Service Information 36
Warranty 37

Important Safety Instructions

Read all instructions before using the dishwasher.

- **It is your responsibility to be sure your dishwasher**
  - Has been installed by a qualified installer.
  - Has been properly grounded.
  - Has been properly connected to an appropriate electrical supply, water supply and drain.
  - Has been securely mounted to the cabinet.
  - Is properly maintained.
  - Has had all shipping materials, packaging and temporary labels removed.
- Install dishwasher so that it is protected from the elements. Protect dishwasher from freezing to avoid possible fill valve damage.
- **DO NOT** use an extension cord to connect the dishwasher to electricity.
- Use the dishwasher only for its intended function.
- To avoid the risk of personal injury due to steam burns, open door slowly to allow steam to escape before opening completely.
- Use only detergents and rinse agents recommended for use in household dishwashers, and store them in a safe and dry environment away from the access of children.
- When loading items to be washed, place sharp items so that they are not likely to damage the door seal and load sharp knives with the handles up to avoid the risk of personal injury.
- **DO NOT** wash plastic items unless marked “dishwasher safe” or the equivalent.
- **DO NOT** operate the dishwasher without the filters in place.

Getting Started

Important Safety Instructions

- **DO NOT** operate your dishwasher unless all enclosure panels are properly in place.
- **DO NOT** abuse, sit on or stand on the door or dish rack of the dishwasher.
- **DO NOT** tamper with controls.
- To reduce the risk of injury, do not allow children to play in or on a dishwasher.
- If hot water has not been used recently (usually two weeks or longer), hydrogen gases may buildup in the water heater and the hot water pipes. **HYDROGEN GAS IS EXPLOSIVE.** To prevent injury or damage, before using your dishwasher, turn on all hot water faucets and allow water to run for several minutes before using your dishwasher. This will allow gases to escape. Do not smoke or use any open flames near the faucet while it is open.
- Depending on cycles/options selected, the dishwasher operates at very high water temperatures 155°F (68°C) on some models. Use extreme caution when opening unit or handling dishes.
- **DO NOT** use door to push racks in. Close the dishwasher door when not in use.
- **DO NOT** repair or replace any part of the appliance unless specifically recommended in the manual. All other servicing should be referred to a qualified authorized technician.
- When discarding an old dishwasher, always remove the door to prevent accidental entrapment.

SAVE THESE INSTRUCTIONS!

Warnings & Safety

Warning and Important Safety Instructions appearing in this manual are not meant to cover all possible conditions and situations that may occur. Common sense, caution, and care must be exercised when installing, maintaining, or operating the appliance.

ALWAYS contact the manufacturer about problems or conditions you do not understand.

Recognize Safety Symbols, Words, Labels

⚠ DANGER

Hazards or unsafe practices which WILL result in severe personal injury or death

⚠ WARNING

Hazards or unsafe practices which COULD result in death or severe personal injury

⚠ CAUTION

Hazards or unsafe practices which COULD result in minor personal injury.

All safety messages will identify the hazard, tell you how to reduce the chance of injury, and tell you what can happen if the instructions are not followed.

Read and follow all instructions before using this appliance to prevent the potential risk of fire, electric shock, personal injury or damage to the appliance as a result of improper usage of the appliance. Use appliance only for its intended purpose as described in this manual.

To ensure proper and safe operation: Appliance must be properly installed and grounded by a qualified technician. Follow installation instructions enclosed with the appliance. **DO NOT** attempt to adjust, repair, service, or replace any part of your appliance unless it is specifically recommended in this manual. All other servicing should be referred to a qualified servicer.

Warnings & Safety

⚠ WARNING

Electrical Shock Hazard

Electrically ground dishwasher.

Connect ground wire to green ground connector in terminal box.

DO NOT use an extension cord.

Failure to follow these instructions, can result in death, fire or electrical shock.

⚠ WARNING

Tip Over Hazard

DO NOT use dishwasher until completely installed.
DO NOT push down on open door.
Doing so can result in serious injury or cuts.

⚠ WARNING

Excessive Weight Hazard

Use two or more people to move and install dishwasher. Failure to do so can result in back or other injury

⚠ WARNING

Never operate the dishwasher without the filters in place.

⚠ WARNING

This product contains chemicals known to the State of California to cause cancer and/or birth defects or other reproductive harm.

Features

- **Multi-Level Power Wash System**
  The wash system includes multi-level washing with two high quality stainless steel wash arms and an exclusive blockproof Flexible-Fluid™ coupling direct water feed.

- **Five-Stage Filtration and Waste Removal System**
  Prevents redepositing of food particles by assuring 100% filtered water is delivered to dishes in all cycles resulting in clean spot-free dishes. The system includes a removable coarse strainer and exclusive Triple-Clean™ filtration with self-cleaning jets, and an exclusive ultra hard food waste disposer.

- **Sure-Temp™ Water Heating**
  HydroFlo™ water heater automatically heats water to appropriate/selected temperature, assuring excellent washing performance.

- **Condensate Quick Dry**
  Moisture at the end of the cycle condenses on the stainless interior and drains into the sump area, providing quick and efficient drying.

- **Quiet Clean™ Performance Packages**
  Engineered top to bottom for the quietest operation possible. The combination of a quiet motor, separate motor and pump for washing and draining, sound absorbing insulation and cushion mounted key operating components provides a unique Quiet Clean™ sound package.

- **"Load-As-You-Like" Sturdi-Bilt™ Racks**
  Fully useable and removable nylon coated steel racks accommodate 15 international place settings of china in a single load.

- **Diamond-Brite™ Stainless Steel Tank and Inner Door**
  Brightly polished surgical stainless steel to maintain optimum long-term appearance.

- **NSF Certified**

- **Energy Star Qualified**

Features

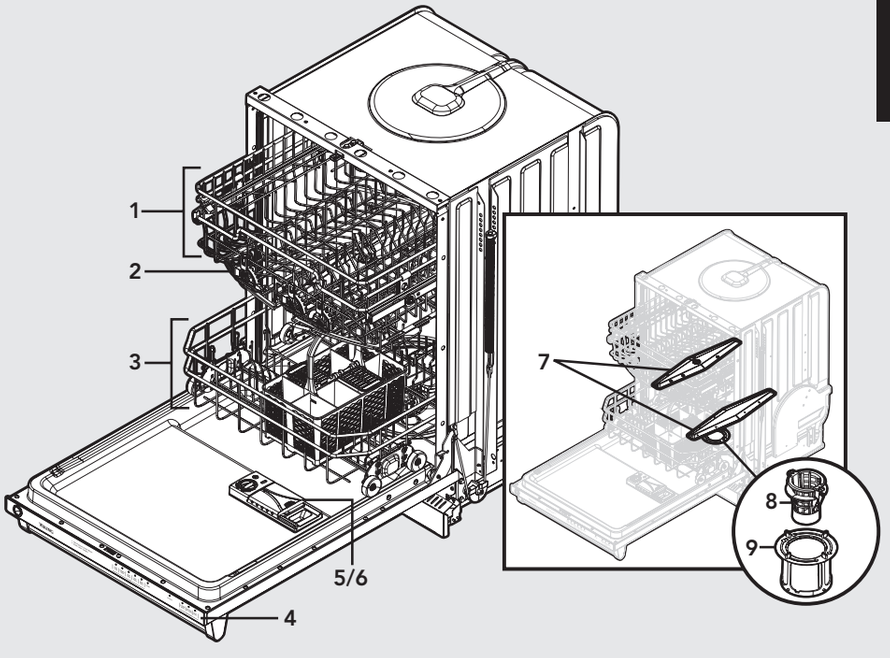

1. Roller Bearing™ upper rack
   - Hold-Tight™ dividers (3)
   - One-piece stemware cradle/cup shelf
2. DishGuard™ protector
3. Lower rack
   - One-piece fold down tines (4 rows)
   - Single-piece silverware basket and lids
4. Top-of-door hidden control panel
5. Automatic detergent dispenser
6. Automatic rinse agent dispenser
7. Stainless steel wash arms (2)
8. Removable coarse strainer
9. Fine filter

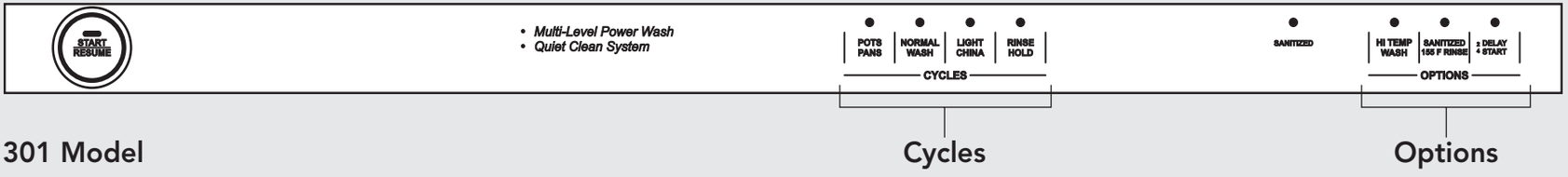

301 Model

Wash Cycles

POTS/PANS
Heavily soiled pots, pans and casserole dishes. Long heated prewash loosens up encrusted food. High temperature main wash and final rinse.

NORMAL WASH
Normally soiled dishes. Energy-usage label is based on this cycle.

LIGHT/CHINA
Lightly soiled items, china and crystal. Lower temperatures for cleaning delicate items.

RINSE/HOLD
All dishware. Short rinse with no heat.

Options

HI TEMP WASH
Increases the temperature, adding heat, time and water for improved cleaning performance. Available only with POTS/PANS and NORMAL WASH.
Note: *Periods of soaking will occur to aid in removal of baked on soils*

SANITIZED 155˚F RINSE
Raises water temperature to 155˚F in the final rinse. Adds heat and time to the cycle. This high temperature rinse sanitizes your dishes and glassware in accordance with NSF/ANSI STANDARD 184 for Residential Dishwashers. Certified for residential dishwashers and not intended for licensed food establishments. Available only with POTS/PANS and NORMAL WASH.

DELAY START
Lets you delay running the dishwasher for up to 4 hours. To set “DELAY START”, select the desired wash cycle and option(s). Press the “DELAY START” button once and the number “2” will light, indicating a two hour delay. If you desire a longer delay, continue pressing the “DELAY START” button to a 4 hour delay. The corresponding number on the button will light. Once you have set the desired delay time, press the “START” button and close the door. “DELAY START” is not available with the Rinse/Hold cycle.

AUDIBLE SOUND SIGNAL
A single beep will occur when you select cycles, options and press the “START” key. If the “START” button is not pressed or if the door is not closed within 4 seconds of pressing the “START” button, 3 short beeps will occur. The end-of-cycle signal consists of 2 long beeps and activates 30 minutes after the last drain, when the condensate dry portion of the cycle is completed. For all other error messages and to deselect the audible sound signal, see the Troubleshooting/ Fault Codes section.

ILLUMINATION OF BUTTONS
Option, Cycle and Start buttons will only illuminate after they are selected. The "SANITIZED" indicator will illuminate when the cycle has been completed. If your dishwasher did not properly sanitize your dishes, the indicator light will not illuminate. This can happen if the cycle is interrupted or the water could not be heated to the required temperatures. The "SANITIZED" indicator light goes off after you have opened and closed the door or if you press and hold the START/RESUME button.

Cycle Data

Cycle name	Recommended dish types/ soil level	Temperatures	Total water (gal.)	Total Wash Time (minutes) 120F° (49C°)
Pots/ Pans	Heavily soiled pots, pans, casserole and dishware	Prewash & Rinse–130°F (54° C) Main Wash–145°F (63°C) Last Rinse–150°F (66°C)	8.3	131 (min.)
Normal Wash	Normally soiled dishes	Main Wash–120°F (49°C) Last Rinse–140°F (60°C)	4.25	117 (min.)
Light/ China	Lightly soiled items, china and crystal	Main–120°F (49°C) Rinse–135°F (57°C)	5.6	101 (min.)
Rinse/ Hold	All dishware	Rinse	1.4	8.5 (min.)

Note: *All wash times, temperatures and fills are approximate and are dependent on installation and environmental conditions.*

Note: *Heating delays to meet set temperatures may extend the cycle times.*

Note: *Wash time does not include the 30 minute condensate dry time.*

Preparing Dishes

It is not necessary to rinse normal food soils off the dishes before putting them in the dishwasher, although larger solid particles, such as bones, seeds, skins, pits, and toothpicks should be removed.

If you are not going to run the dishwasher immediately after loading, it is best to rinse salty and highly acidic foods off stainless steel, silver, and silverplate flatware. Prolonged contact of foods—including lemon juice, salt, vinegar, mustard, mayonnaise, and salad dressings—with stainless steel can cause corrosion (pitting).

Before Operation

1. Load the dishes per recommended loading. See section on Loading Dishwasher.
2. Make sure there is rinse agent in the dispenser. Add rinse agent if needed. See section on Rinse Agent.
3. Add proper amount of detergent and pre-wash. See section on Dishwasher Detergent.
4. Push both top and bottom racks in.
5. Select the desired cycle and option(s).
6. Press "START". The "START" symbol will illuminate to indicate the unit is ready.
7. Close the door tightly until you hear a click. Otherwise, the dishwasher will not start.

Option Restrictions

All options are not available for all cycles. Please note the following:

- The option "HI TEMP WASH" is not available with the "LIGHT/CHINA" cycle.
- No options are available in the "RINSE/HOLD" cycle.
- The option "SANITIZED 155°F RINSE" is not available with the "LIGHT/CHINA" cycle.

After selecting the wash cycle and options, depress "START" button. The start symbol will illuminate. This merely means the machine is ready. Close the door securely within 4 seconds of pressing the "START" button.

Changing a Program

Changing a Program After the Unit has Started

The dishwasher is programmed to stop operating if the door is opened during a cycle. To change a program or option after starting the machine, open the door slightly to let the spray arms stop rotating and avoid getting sprayed with water. Press and hold "START" for four seconds to cancel the current selection, then press the touchpad(s) for your desired selection.

Press "START" again and close the door. The drain pump will run to remove any dirty water from the dishwasher before starting the newly selected cycle. Check to make sure there is still detergent in the detergent dispenser.

Opening the Door after Cycle has Started

If the door is opened after the cycle has started, the "START" button will flash to indicate that the dishwasher is in Standby Mode. Press the "START" button and close the door securely within 4 seconds to restart the cycle.

Washing Recommendations

Most household dishes such as plates, saucepans, and flatware are dishwasher safe. If you are unsure, check the manufacturer's recommendations before washing. You are responsible for what is washed in the dishwasher.

Materials	Diswasher safe?	Comments
Aluminum	Yes exceptions: anodized and disposable aluminum	Anodized aluminum may fade or darken. Disposable aluminum may contact other dishes and cause dark spots.
Cast iron	Not recommended	Seasoning will be removed and the cast iron will rust.
China/ stoneware	Yes exceptions: antique, hand-painted, or gold leaf	China without decoration or with glaze covered patterns is usually dishwasher safe. Antique, hand-painted and gold-leaf China may discolor or fade.
Crystal	Yes exceptions: antique, some lead crystal	Position crystal so that it will not fall over or knock against other dishes. Some types of lead crystal may etch in dishwasher.
Flatware with glued handles	Not recommended	Certain adhesives may loosen and cause thandles to come off.
Glass	Yes exceptions: milk glass (not recommended)	Milk glass may discolor with repeated washing.
Gold-plated flatware	Not recommended	Gold-plated flatware may discolor.

Washing Recommendations

Materials	Diswasher safe?	Comments
Knives	Yes	Position knives in large items tray so that blades are not touching. Knives may become dull if the blades contact other items.
Non-stick coatings	Not recommended	Coating may wear off with repeated washing.
Pewter/ brass/ bronze	Not recommended	Pewter, brass, and bronze may tarnish or pit.
Plastic	Yes	Disposable plastic cannot withstand high water temperature or dishwasher detergent.
Stainless steel	Yes	Rinse stainless steel items if they will not be washed immediately. Prolonged contact with salty or acidic foods will stain. Position stainless steel pieces so they do not contact dissimilar metals.
Silver/ silverplate	Yes	Rinse silver/silverplate items if they will not be washed immediately. Prolonged contact with salty or acidic foods and foods containing sulfur will stain. Position stainless steel pieces so they do not contact dissimilar metals.
Tin	Not recommended	Tin may rust.
Wood	Not recommended	Wash wood items by hand. Wood may warp, crack, or lose its shape or finish in the dishwasher.

Rack Adjustments

The Lower Rack

The lower rack is best for dinner plates, smaller plates, serving plates, larger bowls, pots, and pans.

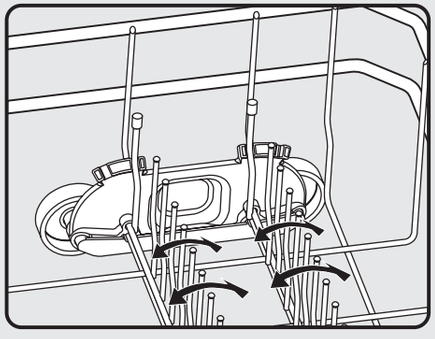

Fold-Down Tines

- Securely place heavily soiled cookware face down in the rack.
- Use the fold-down tines to provide space for large items such as pots and pans.
- Make sure pot handles and other items do not stop rotation of lower wash arm by hanging below the rack.

The Upper Rack

The upper rack is best for glasses, cups, bowls, small plates, and saucers and can accomodate full sized plates up to 10-1/4".

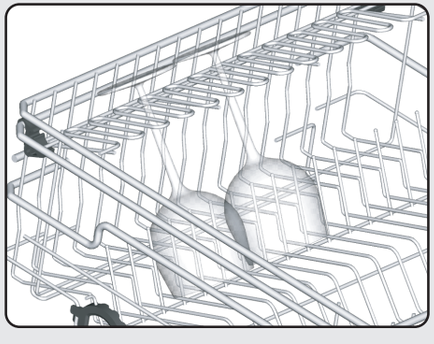

Stemware Cradle

- Make sure items hanging below the rack do not block the rotation of the wash arm.
- Make sure small plastic items are held firmly in place with Hold Tight™ dividers.
- Arrange stemware between prongs of stemware cradle so that the stemware cannot move easily.

Loading the Dishwasher

General Loading Guidelines

- Load all items so that the force of the water and the detergent reach soiled surfaces.
- Do not let china, crystal, and other delicate items touch each other during dishwasher operation.
- Do not use door to push racks in.

Note: *Do not load dishes in a manner that would block the detergent dispenser lid from completely opening. The detergent dispenser lid could be damaged.*

Note: *Do not put sterling silver or silver-plated flatware in the same compartment with stainless steel. Contact between the metals can damage silver.*

DO NOT *put stainless steel of different qualities close to each other. Contact can damage metals.*

Rinse stainless steel items if they will not be washed immediately. Prolonged contact with salty or acidic foods will cause stains.

Extra Quiet Operation Hints

Your dishwasher has been designed and engineered to give superior cleaning results and to operate very quietly. To avoid any extra clattering or thumping noises during operation:

- Keep sink drain plugs inserted during dishwasher operation to prevent noise transfer through drains.
- Load dishes so they do not touch each other.
- Make sure lightweight items are secured in the rack.
- Make sure pot lids and handles, pizza pans, cookie sheets, etc., do not touch interior walls.

Loading Silverware Basket

The Silverware/Cutlery Basket

Tips for Best Cleaning Results:

- Distribute items evenly and mix knives, forks, and spoons so that items will avoid nesting.
- Always place forks and spoons with eating portions up and handles down.
- Compartments with lids help separate the silverware for the best cleaning and drying results. The lids also hold small, lightweight items in place.
- **IMPORTANT**: Sharp or pointed items, such as knives, should always be put in with the point down to protect your hands.

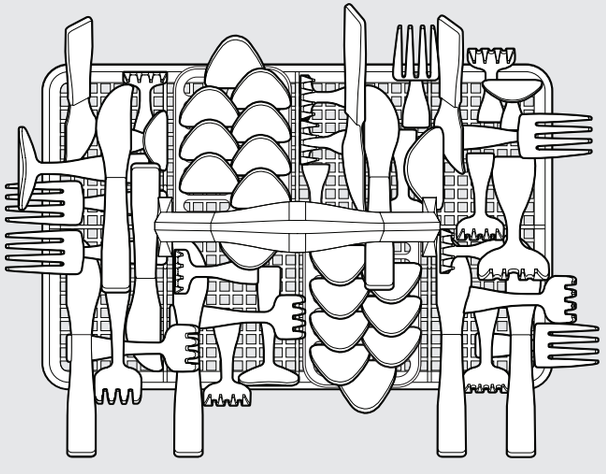

Loading Racks (10 Place Setting)

Upper Rack

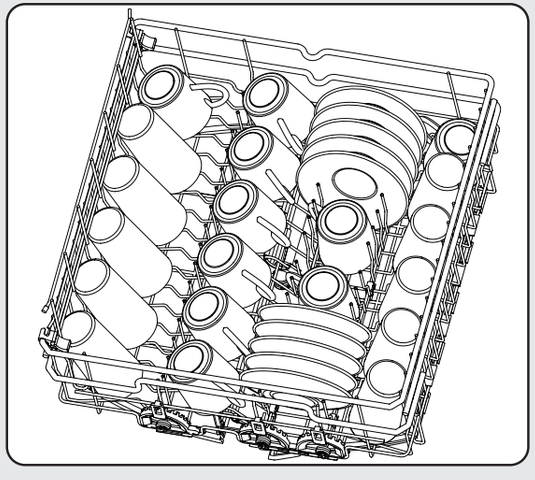

- 10 glasses
- 10 coffee cups
- 10 saucers

Lower Rack

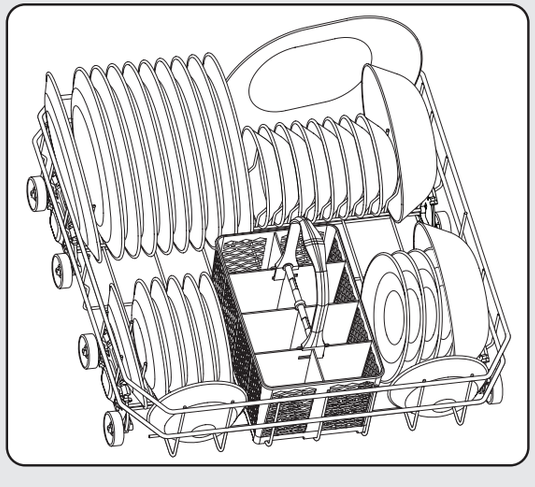

- 10 bowls
- 10 dinner plates
- 1 serving platter
- 2 serving bowls
- 10 bread and butter plates

(AHAM DW-1 10 place setting)

Loading Racks (15 International Place Setting)

Upper Rack

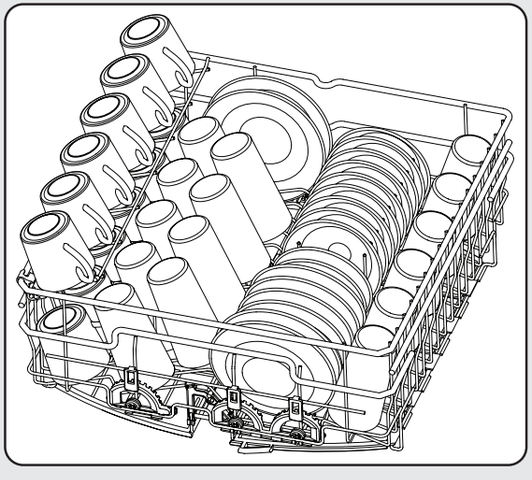

- 12 coffee cups
- 15 glasses
- 11 bowls
- 11 saucers
- 3 bread and butter plates

Lower Rack

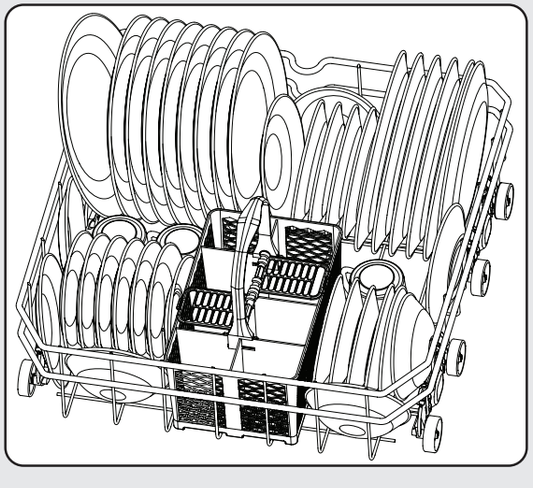

- 4 saucers
- 15 dinner plates
- 12 bread and butter plates
- 4 bowls
- 3 coffee cups

Dishwasher Detergent

Use only a detergent designed for an automatic dishwasher. Never use oven cleaners or other caustic cleaners not designed for dishwashers. These will damage the stainless steel interior, filters and pump components of your dishwasher. Never use soap, laundry detergent or handwashing detergent in your dishwasher, as they are too mild and will cause severe over-sudsing. The foam product prevents the dishwasher from working properly and may cause damage to the dishwasher.

WARNING: Dishwasher detergent is corrosive. Keep out of reach of children. If swallowed, drink plenty of water or milk. DO NOT induce vomiting. Seek medical advice without delay. If dishwasher detergent gets into eyes, rinse immediately with plenty of water.

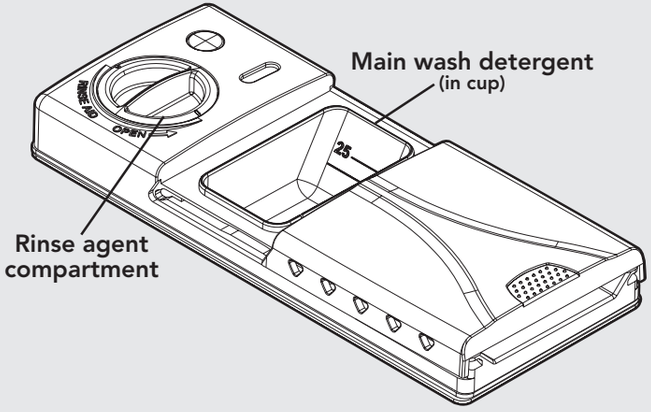

Storing the Detergent

For best results, keep your detergent container tightly closed after each use, out of reach of children and stored in a cool, dry place. **Storage under the sink is not advisable for powdered detergent, because this area is generally too warm and moist to keep detergent fresh.**

Operation

Rinse Agent

A rinse agent causes water to flow off the dishes more quickly, preventing droplets that dry as spots and improving drying performance. Rinse agent come in solid and liquid forms. Your dishwasher's rinse agent dispenser uses the liquid form. Rinse agent used with soft water can cause a cloudy film on dishes.

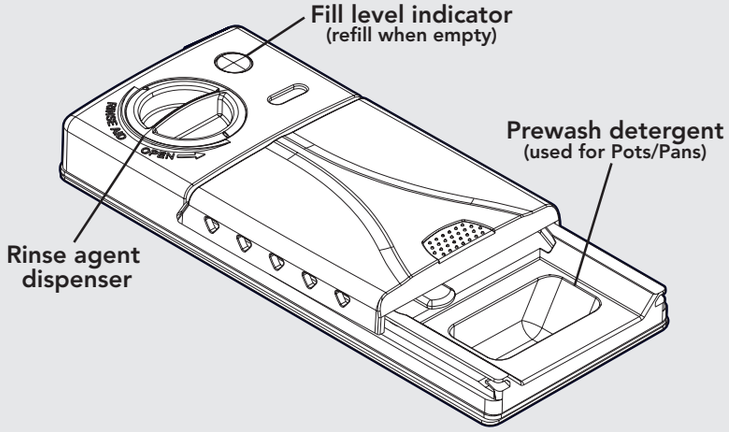

Filling the Rinse Agent Dispenser

Drying will usually be better if you use a rinse agent. To fill the dispenser, open the cap and pour the rinse agent into the dispenser up to the knob for dosage setting. The dispenser will hold approximately four ounces of liquid rinse agent.

Adjusting the Dosage of Rinse Agent

The rinse agent dosage is set by the manufacturer and is dispensed automatically into the final rinse. If necessary, the rinse agent dosage can be adjusted by inserting a screwdriver inside the filler hole where the adjustment device is set on "2." It is recommended that the dial be adjusted only one number at a time.

Note: *For soft water conditions, it may be necessary to reduce the rinse agent dosage setting.*

Note: *Too much rinse agent is not advisable as this might result in the formation of foam.*

Operation

Wash Temperature

Hot water dissolves and activates dishwashing detergents, dissolves grease on dishes, and helps glasses dry spot free. If the incoming water is extremely cold due to unusually cold temperatures outside, if you have recently done laundry or run hot water for showers, or if your water travels a long distance from the hot water heater to the dishwasher, the running time of the dishwasher may be longer to heat the water to the required temperature.

Checking the Wash Temperature

An incoming water temperature of 120°F (49˚C) is recommended. However, the Sure Temp Water Heating System will ensure the water temperatures are correct for the cycle/options selected.

Energy Saving Tips

- Only start a wash when the machine is completely full.
- Do not prewash dishes. Simply scrape, load, and wash.
- Use the POTS/PANS program only for heavily soiled dishes.
- Select NORMAL CYCLE.

Water Hardness

Hardness of Water

Water has a different "hardness," or mineral content, in different locations. The hardness is measured in grains per gallon (gpg). Find out your water's hardness by asking your local water department, county extension agent, or water softening company. Ask how many "grains" of hardness are in your water.

The harder the water is, the more detergent you need. For the detergent amounts recommended for use in your location with your water, follow the guidelines in the chart. With hard water, you need more detergent to get dishes clean. With soft water, you need less.

Too much detergent with soft water can cause "etching," a permanent cloudiness of glassware. If you have hard water, the dishes as well as the dishwasher itself may accumulate a gray deposit after some time. This deposit can be remedied by using a mild citric acid solution instead of detergent in the heavy wash program.

How Much Detergent to Use?

The amount of detergent you use depends on the hardness of the water and on the cycle you select. Generally, only one tablespoon of detergent (per cup) is needed for a normal load.

Water hardness (grains per gallon)	Amount of detergent (powder or liquid)
Soft water 0-3 gpg	1 tablespoon per cup (15ml)
Medium hard water 4-8 gpg	2 tablespoons per cup (30ml)
Hard water 9-above gpg	3 tablespoons per cup (45ml)

Note: *Line level on detergent dispenser represents 2 tablespoons*

Note: *In areas with hard water above 12 grains, a water softener is recommended.*

Your new dishwasher is designed to give you years of dependable service. In order to maintain a high level of performance, you need to make sure your dishwasher is properly cared for and cleaned. Here are a few things you can do to make sure your dishwasher performs at its highest level.

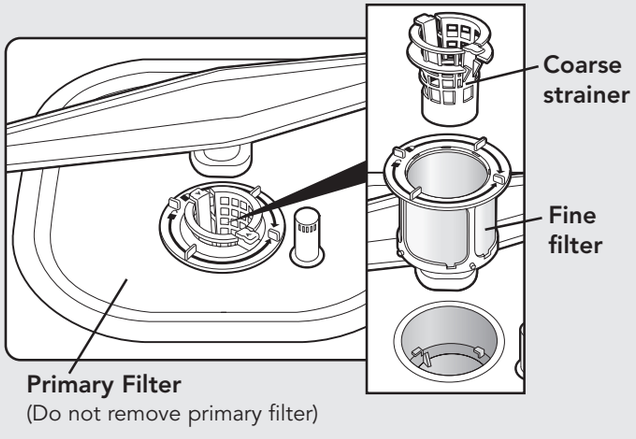

Filters

The filters are important, because they continuously filter wash water. Under normal operation, the filters are self cleaning and require no maintenance. If there is a heavy amount of food soil, sediment or hard water conditions, it may be necessary to clean the filters after each use. To clean, remove the filters as shown in the above illustration and soak overnight in a 50/50 solution of water and vinegar. Citric cleaner and water are also acceptable. Filters should appear bright when clean.

The Coarse Strainer

Large food particles that can't pass through the drainage pump are collected in the coarse strainer. Lift out and empty the coarse strainer when necessary. Don't forget to put it back again. It is normal for a small amount of water to remain in the coarse strainer area.

⚠ WARNING

Never operate the dishwasher without the filters in place.

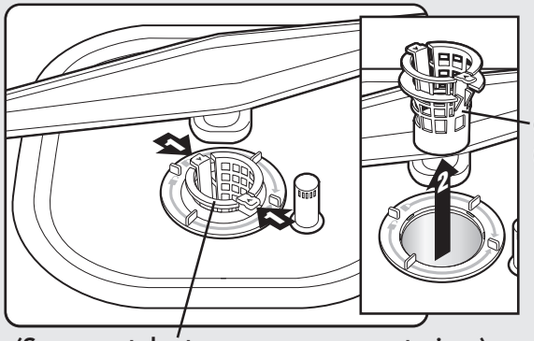

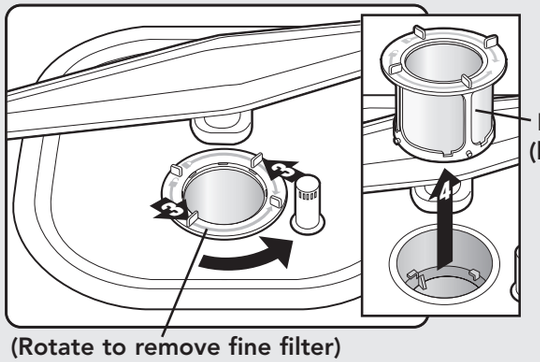

To Clean Filters

Remove the coarse strainer and empty. If necessary, remove the fine filter and clean all surfaces. **DO NOT** remove primary filter. Replace the filters and secure in place.

Storing the Dishwasher

If you will not be using the dishwasher during the summer months, turn off the water and power supply to the dishwasher. In the winter, if the dishwasher could be exposed to near freezing temperatures or is left in a seasonal dwelling such as a second or vacation home, avoid water damage by having your dishwasher winterized by an authorized service person.

Troubleshooting

Poor wash results may not always be caused by the dishwasher. Please review the following Troubleshooting Charts for possible remedies. You may find the proper solution without having to call a service provider.

If the cycle buttons are flashing, please refer to the Fault Codes Chart in the following pages of this manual for possible remedies.

Poor Dishwashing Results

Problem	Possible Cause and/or Remedy
The dishwasher does not start	Door is ajar: Make sure the door is closed securely. "DELAY START" Option is On: Make sure the "DELAY START" option is not turned on. Water Supply is Disconnected: Check that the water supply is connected properly and the water is turned on. Power Cord is Disconnected: Make sure the power cord is properly plugged into the wall socket. Fuse is Blown: Check your fuse box for a blown fuse or tripped circuit breaker.
Spotting and filming	Hard water: Use the maximum recommended amount (3 tablespoons) of dishwasher detergent.To remove hard water spots, try a vinegar rinse: • Wash and rinse load as usual. • Remove all metal items from dishwasher. • Do not add detergent. • Pour two cups of vinegar into a bowl and set it on the bottom rack of the dishwasher. • Run the dishes through an entire wash program. If the vinegar rinse doesn't work, repeat the above process substituting 1/4 cup citric acid crystals (available at most drug stores) for the vinegar. Wiping with a damp cloth should remove spots from metal items. For sterling silver and silver plated flatware, rub with a towel, or use a good cream silver polish. Filter system: Check filter system to be sure it is clean and properly installed.

Troubleshooting

Problem	Possible Cause and/or Remedy
Spotting and filming	No rinse agent: Does the rinse agent dispenser need to be filled? Dishwasher detergent: Use only the correct amount of dishwasher detergent according to the hardness of the water and the wash program you have selected. Do not use old or caked detergent. Store the dishwasher detergent in a dry place and in a closed container. Change the dishwasher detergent if the result is still unsatisfactory. Items not loaded properly: Check that you loaded the items according to the instructions on pages in this manual. Do not overload. Make sure water can reach all soiled surfaces. For hard water areas: Adding additional products especially designed to eliminate hard water deposits (such as Glisten, Dishwasher Magic™ and Lemi Shine) may be used to maintain performance.
Dishes are not clean	Check that both wash arms can rotate freely and that items do not obstruct the movement of the wash arms. Lift the arms and make sure that no grains of dirt retard the rotation of the wash arms. If necessary, clear the obstruction, refit the arms, and check that they rotate freely. Be sure a utensil or handle has not prevented their turning
Strainer blocked	Check the strainer. Clean if necessary. Refer to maintenance section in this manual.
Excessive foam in the machine	Use only dishwasher detergent.
Marks and discoloration	Aluminum utensils rubbing against items during washing: Be sure aluminum utensils, especially light weight foil-type pans, do not touch dishes.To remove spots, use a non-abrasive cleaner.
Small particles deposited on items	Detergent: Use only fresh detergent. Store in a tightly closed container in a cool dry place. Fill dispenser only when ready to start the dishwasher. Use the recommended amount of detergent, especially with hard water

Troubleshooting

Problem	Possible Cause and/or Remedy
Small particles deposited on items	Improper loading of dishes: Load dishes to prevent water and detergent from being trapped in or between items. Water should circulate freely. Flatware incorrectly loaded: Pay particular attention to spoons so that they do not nest in each other and prevent water penetration. Make sure filters are installed properly. Filter may have clogged due to heavy sediment, food soil or hard water conditions.
Yellow or brown marks	Temporary solution: Pour in one teaspoon to one tablespoon of citric acid crystals instead of the prewash detergent. Follow this prewash with a full detergent wash. Use the pots/pans or normal wash cycle. Permanent solution: Install an iron removal system in the water supply. Copper with sterling silver: Yellow film on sterling silver results when washing copper items in the same load. Silver polish usually removes the stain. Tea or coffee (tannic acid): Tea or coffee can stain cups. Remove stains by hand, using a solution of 1/2 cup bleach and 3 cups warm water. (Do not use on sterling silver or silverplate.)
Discoloration of stainless steel, silverplate, or sterling silver	Allowing salty foods to remain on flatware Rinse flatware that is to stand several hours before washing. Stainless steel contacting silver: **DO NOT** put stainless steel and silver flatware in the same silverware basket compartment. Direct contact between these metals can cause permanent damage to silver. Clean stained items with silver polish. **DO NOT** use abrasives on stainless steel or silver.
Discoloration of plastics	Plastic items have a low heat tolerance: Plastics vary in their ability to tolerate heat. Check washing instructions for all plastic items to be sure they are dishwasher safe.
Marks on melamine and plastics	Porous material: Use a special cleaner for plastic. **DO NOT** use bleach or scouring powder on these materials.

Troubleshooting

Problem	Possible Cause and/or Remedy
Detergent left in detergent compartment	Compartment cover blocked: The cover may not be opening because of improperly loaded items. Move dishes that may be blocking it. Old detergent: If detergent is hard or caked in the box, throw away. Use only fresh detergent. Add detergent just before starting the dishwasher.
Cloudy film on glassware-etching of glass	Too much detergent: especially in soft water. If vinegar or citric acid rinse doesn't remove film, the cloudiness is "etching." This is permanent. If you have soft water, use the least amount (one teaspoon) of recommended dishwasher detergent to prevent etching. Use high quality dishwashing detergent and rinse aid. Do not overload the machine. Water should circulate freely to assure adequate rinsing and draining. Dry without heat.
Dishes not dry	Non-heat drying: Allow more drying time when using non-heat drying. No rinse agent: Fill rinse agent dispenser. Rinse agent helps dishes to dry faster. Plastic items: Certain plastic materials are difficult to dry. Plastics may need towel drying. Improper loading or unloading: Do not overload or nest items. Be sure all surfaces drain well. Load items with concave bases so as much water as possible can run off. Unload the lower rack first. Water from dishes in the upper rack may be spilling onto the lower rack.
Chipping or breaking of glassware	Improper loading: Do not overload. Load between prongs, not over them. Glasses loaded over prongs are not supported and may break. Make sure glassware is secure. Always use upper rack for delicate items. Use the light/china cycle.
Unusual noise	Improper loading: Utensils may not be secure or may have dropped from the rack. Water may cause utensils to rattle. Make sure everything is securely placed in dishwasher.

Troubleshooting

Problem	Possible Cause and/or Remedy
Dishwasher will not drain	Door open: Check that door is firmly closed. Controls: Check that dishwasher is on. Water feed line: Check to see that the water feed line is not crimped. Water supply: Be sure water is available and turned on.
Water backs up in sink when dishwasher drains	Food waste disposer and trap: Check disposer and trap at sink for blockage or food particles.
Water left in bottom near filters	Dishwashing cycle not complete: Allow dishwasher to complete cycle. Some water is normal. Water left in removable coarse strainer is normal.
Dishwasher will not drain	The drain hose is clogged/blocked: Check to make sure there are no obstacles in the hose where it connects to the water. Foreign particles can get stuck in the entrance of the connection line. Also, check to make sure that the cone-shaped connection line has been cut to an inner diameter of at least 3/4" (1.9 cm). The drain hose is kinked: Check to make sure that there are no folds or sharp bends in the drain hose.
Odor in your dishwasher	If you are only running your dishwasher every 2 to 3 days, bacteria in the food soil left on your dishes will create an unpleasant odor. Use the Rinse/Hold option in between cycles. To help eliminate the odor, use a detergent with chlorine bleach and an extra heat option with your cycle. If large chunks of food soil are left on plates and dishes, it may take several washes for them to pass through the filtration system of the dishwasher, thus causing food odor. Make sure the dishwasher is cool; remove chunks of food soil from filter area. Then run your dishwasher as normal. There are products that you can use to clean your dishwasher such as leave your dishwasher free of odor, spots, deposits and hard water build-up.

Troubleshooting

Problem	Possible Cause and/or Remedy
Dishwasher has a plastic smell	Your dishwasher may have parts that have a plastic odor to them. Place 2 cups white vinegar in a dishwasher safe measuring cup and place in the lower rack. Do not use detergent. Run the dishwasher through the longest cycle with an extra heat option. Do not use heated dry
Sanitized LED did not illuminate	Dishwasher cycle was interrupted or the water did not reach required temperature.

Troubleshooting/Fault Codes

Flash Pots/Pans	Flash Normal Wash	Fault	Action
1	1	Pan Flood Sensor Disconnect	Reset Unit and try again. If problem persists, contact service.
1	2	Motor Control Status Error	Reset Unit and try again. If problem persists, contact service.
1	3	Motor Control Comms Error	Reset Unit and try again. If problem persists, contact service.
1	4	Diverter Timeout	Reset Unit and try again. If problem persists, contact service.
1	5	Drain Error	1. Turn water on at sink and run garbage disposal to verify that sink is not clogged. 2. Verify that dishwasher drain hose is not clogged or kinked. 3. If draining into disposal, verify that plug has been removed from disposal. 4. Verify that drain hose has high loop, per installation guide. 5. Verify that dishwasher is level front to back and side to side. 6. Verify filters are not clogged. Reset Unit and try again. If problem persists, contact service.
2	1	Huba Disconnect Error	Reset Unit and try again. If problem persists, contact service.
2	2	Fill Timeout	1. Verify water supply to dishwasher is turned on. 2. Verify that fill line is not kinked. 3. Verify that dishwasher is level front to back and side to side. 4. Turn water on at sink and verify there has not been a decrease in water pressure. Reset Unit and try again. If problem persists, contact service.
2	3	Low Level Sensor Error	1. Verify that no dishes have turned over and are holding a significant amount of water. 2. Verify that drain hose has high loop, per installation guide. Reset Unit and try again. If problem persists, contact service.
2	4	High Level Error	1. Verify items in rack are properly retained so that they can not turn over. Reset Unit and try again. If problem persists, contact service.
3	1	UI-MC Comm Error	Reset Unit and try again. If problem persists, contact service.
3	3	Drain Pump Error	Reset Unit and try again. If problem persists, contact service.
3	4	Motor Status	Reset Unit and try again. If problem persists, contact service.
3	5	Motor Under Voltage	Reset Unit and try again. If problem persists, contact service.
4	1	Temperature Sensor Error	Reset Unit and try again. If problem persists, contact service.
4	5	Fill Too Fast Error	Verify dishwasher is level front to back and side to side. Reset unit and try again. If problem persists, contact service.
5	5	Internal Error	Reset Unit and try again. If problem persists, contact service.
See Note A		Pan Flood	Reset Unit and try again. If problem persists, contact service.

Note A–*Both lights flash continuously.*
Note B–*To reset unit, press and hold the START button 4 seconds.*
Note C–*Numbers listed indicate the times the lights will flash when a specific error is detected (example: For a drain error, the POTS/PANS light will flash once and the NORMAL WASH light will flash 5 times).*
Note D–*Cycle and Option keys will only illuminate after they are selected. To activate dishwasher, press START, the light will illuminate, close the door within 4 seconds and cycle will start.*

Turning Audible Sound On and Off:
To turn off, press Rinse/Hold button for 10 seconds. The beep stops and the Rinse/Hold LED will flash 2 times. To turn on, repeat above instructions. The audible sound beeps 2 times and the Rinse/Hold LED flashes 2 times to identify that it is on.

Note: *The audible sound cannot be disabled for error messages.*
Note: *The LED will flash in sync with the audible sound.*
Note: *Start/Resume will flash when cycle is interrupted.*

Service Information

If service is required, call your dealer or authorized service agency. The name of the authorized service agency can be obtained from the dealer or distributor in your area.

Have the following information readily available.

- Model number
- Serial number
- Date purchased
- Name of dealer from whom purchased

Clearly describe the problem that you are having. If you are unable to obtain the name of an authorized service agency, or if you continue to have service problems, contact Viking Range Corporation at 1-888-845-4641, or write to:

VIKING RANGE CORPORATION
PREFERRED SERVICE
1803 Hwy 82W
Greenwood, Mississippi 38930 USA

Record the information indicated below. You will need it if service is ever required. The model and serial numbers are located on an identification label attached to the left side of the tank. For access, simply open the door of the dishwasher.

Model no._____ Serial no. _____

Date of purchase _____ Date installed _____

Dealer's name _____

Address _____

_____

If service requires installation of parts, use only authorized parts to insure protection under the warranty.

Keep this manual for future reference.

Warranty

BUILT-IN DISHWASHERS WARRANTY
THREE YEAR FULL WARRANTY

Built-in dishwashers and all of their component parts, **except as detailed below*†**, are warranted to be free from defective materials or workmanship in normal residential use for a period of three (3) years from the date of original retail purchase or closing date for new construction, whichever period is longer. Viking Range Corporation, warrantor, agrees to repair or replace, at its option, any part which fails or is found to be defective during the warranty period.

***FULL NINETY (90) DAY COSMETIC WARRANTY:** Product is warranted to be free from cosmetic defects in materials or workmanship (such as scratches on stainless steel, paint/porcelain blemishes, etc.) for a period of ninety (90) days from the date of original retail purchase or closing date for new construction, whichever period is longer. Any defects must be reported to the selling dealer within ninety (90) days from date of original retail purchase. Viking Range Corporation uses high quality processes and materials available to produce all color finishes. However, slight color variation may be noticed because of the inherent differences in painted parts and porcelain parts as well as differences in kitchen lighting, product locations, and other factors. Therefore, this warranty does not apply to color variation attributable to such factors.

†FULL NINETY (90) DAY WARRANTY IN "RESIDENTIAL PLUS" APPLICATIONS: This full warranty applies to applications where use of the product extends beyond normal residential use, but the warranty period for products used in such applications is ninety (90) days. Examples of applications covered by this warranty are bed and breakfasts, fire stations, private clubs, churches, yachts, etc. Under this "Residential Plus" warranty, the product, its components and accessories are warranted to be free from defective material or workmanship for a period of ninety (90) days from the date of original retail purchase. This warranty excludes use of the product in all commercial locations such as restaurants, food service locations and institutional food service locations.

FIVE YEAR LIMITED WARRANTY ON NYLON RACKS, ELECTRONIC CONTROLS, MOTOR/PUMP ASSEMBLY, AND WATER DISTRIBUTION SYSTEM COMPONENTS

Any upper and/or lower nylon rack which rusts through due to defective materials or workmanship and any electronic controls which fail due to defective materials or workmanship in normal household use during the fourth through fifth year from the date of original retail purchase will be repaired or replaced, free of charge for the part itself, with the owner paying all other costs, including labor. Any motor/pump assembly or water distribution system component as listed below which fails due to defective materials or workmanship in normal household use during the fourth through fifth year from the date of original retail purchase will be repaired or replaced, free of charge for the part itself, with the owner paying all other costs, including labor.

Motor/Pump and Water Distribution System Components:
Circulation motor/pump
Lower wash arm
Drain motor/pump
Tube to upper wash arm
Fill valve
Upper wash arm
Diverter

LIFETIME LIMITED WARRANTY ON STAINLESS STEEL TANK AND LINER

Any stainless steel tank or inner door liner which develops a water leak due to defective materials or workmanship in normal household use during the lifetime of the product will be repaired or replaced, free of charge for the part itself, with the owner paying all other costs, including labor.

TERMS AND CONDITIONS

This warranty extends to the original purchaser of the product warranted hereunder and to each transferee owner of the product during the term of the warranty and applies to products purchased and located in the United States and Canada. Products must be purchased in the country where service is requested. If the product or one of its component parts contains a defect or malfunction during the full warranty period after a reasonable number of attempts by the warrantor to remedy the defect or malfunction, the owner is entitled to either a refund or replacement of the product or its component part or parts. Replacement of a component part includes its free installation, except as specified under the limited warranty. Under the terms of this warranty, service must be performed by a factory authorized Viking Range Corporation service agent or representative. Service will be provided during normal business hours, and labor performed at overtime or premium rates shall not be covered by this warranty.

Warranty

Owner shall be responsible for proper installation, providing reasonable and necessary maintenance, providing proof of purchase upon request, and making the appliance reasonably accessible for service. The return of the Owner Registration Card is not a condition of warranty coverage. You should, however, return the Owner Registration Card so that Viking Range Corporation can contact you should any question of safety arise which could affect you.

This warranty gives you specific legal rights, and you may also have other rights which may vary from jurisdiction to jurisdiction.

WHAT IS NOT COVERED BY THIS WARRANTY: This warranty shall not apply to damage resulting from abuse, failure to provide reasonable and necessary maintenance, accident, delivery, negligence, natural disaster, loss of electrical power to the product for any reason, alteration, outdoor use, improper installation, improper operation, or repair or service of the product by anyone other than an authorized Viking Range Corporation service agency or representative. This warranty does not apply to commercial usage.

LIMITATION OF REMEDIES AND DURATION OF IMPLIED WARRANTY

OWNER'S SOLE AND EXCLUSIV7E REMEDY FOR A CLAIM OF ANY KIND WITH RESPECT TO THIS PRODUCT SHALL BE THE REMEDIES SET FORTH ABOVE. VIKING RANGE CORP IS NOT RESPONSIBLE FOR CONSEQUENTIAL OR INCIDENTAL DAMAGE, INCLUDING BUT NOT LIMITED TO FOOD OR MEDICINE LOSS, DUE TO PRODUCT FAILURE, WHETHER ARISING OUT OF BREACH OF WARRANTY, BREACH OF CONTRACT OR OTHERWISE. Some jurisdictions do not allow the exclusion or limitation of incidental or consequential damages, so the above limitation or exclusions may not apply to you. **ANY IMPLIED WARRANTIES OF MERCHANTABILITY OR FITNESS FOR A PARTICULAR PURPOSE APPLICABLE TO THIS PRODUCT ARE LIMITED IN DURATION TO THE PERIOD OF COVERAGE OF THE APPLICABLE EXPRESS WRITTEN LIMITED WARRANTIES SET FORTH ABOVE.** Some states do not allow limitations on how long an implied warranty lasts, so the above limitation may not apply to you.

WARRANTY SERVICE

To obtain warranty service, contact an authorized Viking Range Corporation service agent, or Viking Range Corporation, 111 Front Street, Greenwood, Mississippi 38930, (888) 845-4641. Provide model and serial number and date of original purchase or closing date for a new construction. For the name of your nearest authorized Viking Range Corporation service agency, call Viking Range Corporation.
IMPORTANT: Retain proof of original purchase to establish warranty period.

Specifications subject to change without notice.

Notes