BROAN®

SPECIFICATION SHEET

QDE SERIES RANGE HOOD

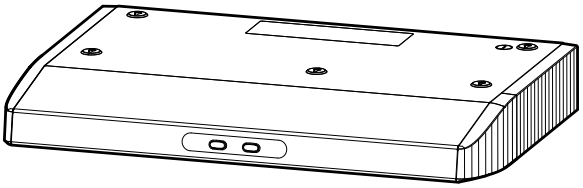

A sleek, contemporary styled range hood with high-performance capability and Energy Star qualification.

FEATURES

- Clean, sleek appearance
- Durable, baked-on polyester finish paint or brushed finish stainless steel
- Over 50% quieter than the average range hood
- Large, full filter design - dishwasher-safe for easy cleaning
- Dual fluorescent lights provide lighting for cooktop visibility (lamps included)
- Centrifugal blower provides increased performance and quieter operation.
- Flush-mounted rocker controls
- Versatile design allows for 3¼" x 10" vertical and horizontal ducting
- Available in 30" width in White and Stainless Steel
- For indoor use only
- Can be used to comply with California Title 24

SPECIFICATIONS

Volts	120
HZ	60
CFM, Normal (Horizontal / Vertical)	130 / 120
CFM, High (Horizontal / Vertical)	290 / 250
Watts, Normal (Horizontal / Vertical)	36.2 / 36.3
Sones, Normal (Horizontal / Vertical)	0.8 / 1.1
Sones, High (Horizontal / Vertical)	5.5 / 6.0
Amps	1.6
Controls	2-sp rocker
Fluorescent Light	CFQ13W/G24q †

† 2 bulbs included.

TYPICAL SPECIFICATION

Range hood shall be Broan QDE Series.

Unit will have clean, contoured appearance with no sharp edges. Finish to be baked-on polyester paint (matte finish stainless steel). It must have a fully-enclosed bottom and dishwasher-safe, full filters.

Hood to be convertible between 3¼" x 10" vertical and horizontal ducted (using two washable aluminum filters).

Range hood to have a centrifugal blower and (2) 13-watt (max.) fluorescent lights. Blower and lights shall be operated using rocker-type controls.

Air delivery shall be no less than 120 cfm and sound level no greater than 1.1 Sones at normal speed (250 cfm and 6.0 Sones at high speed). Air and sound ratings to be certified by HVI.

Unit shall be cULus listed, Energy Star qualified.

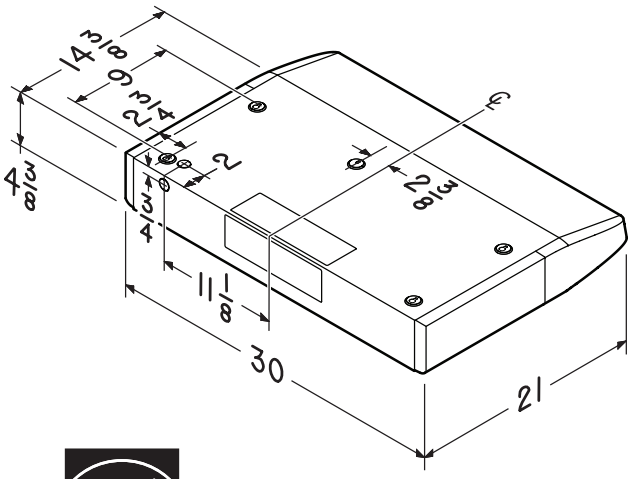

HVI-2100 CERTIFIED RATINGS comply with new testing technologies and procedures prescribed by the Home Ventilating Institute, for off-the-shelf products, as they are available to consumers. Product performance is rated at 0.1 in. static pressure, based on tests conducted in a state-of-the-art test laboratory. Sones are a measure of humanly-perceived loudness, based on laboratory measurements.

c UL US LISTED

ENERGY STAR

Broan-NuTone LLC Hartford, Wisconsin www.broan.com 800-558-1711

REFERENCE	QTY.	REMARKS	Project
			Location
			Architect
			Engineer
			Contractor
			Submitted by Date