SPECIFICATION SHEET
QP130 SERIES

SPECIFICATIONS

Model	*QP130 Series*
Volts	120 VAC
Hz	60
Amps	2.3
CFM (High speed)	300
CFM (Low speed)	120
Sones (High speed)	5.0
Sone (Low speed)	0.8
Ducting Size	7" round or 3¼" x 10"
4 Shielded halogen bulbs, included	MR16, 120 V, 35 W, with GU10 base
Warranty	2 years

DIMENSIONS

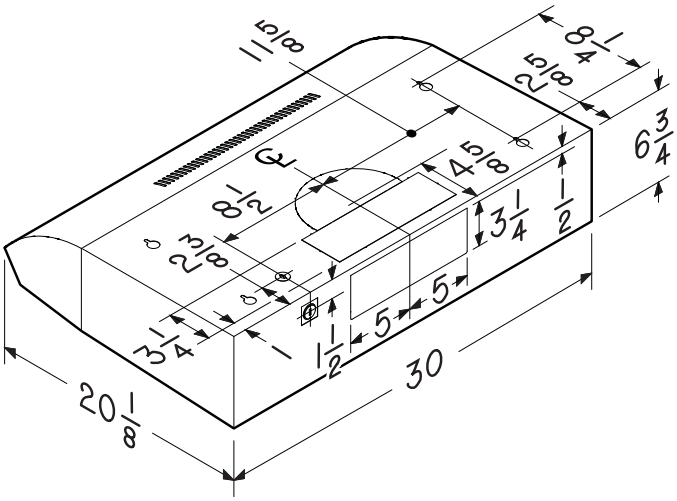

NOTE: Dimensions shown are in inches.

AIR FLOW PERFORMANCE

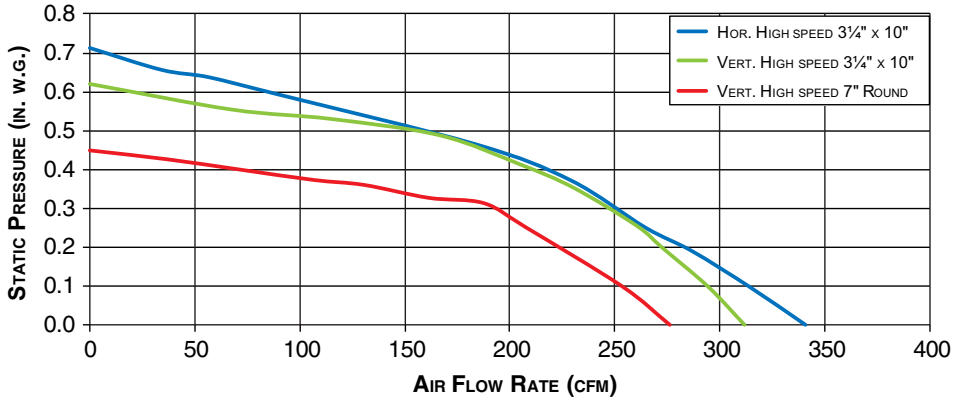

HVI-2100 CERTIFIED RATINGS comply with new testing technologies and procedures prescribed by the Home Ventilating Institute, for off-the-shelf products, as they are available to consumers. Product performance is rated at 0.1 in. (2.54 mm) static pressure, based on tests conducted in a state-of-the-art test laboratory. Sones are a measure of humanly-perceived loudness, based on laboratory measurements.

Venmar Ventilation ULC, Drummondville, Québec www.broan.ca 1-877-896-1119

Project	REMARKS
Location	
Model No.	
Qty.	
Submitted by	
Date	