BROAN® Elite

SPECIFICATION SHEET
E12000 SERIES

SPECIFICATIONS

Model	*E1224SSLS & E1230SSLS*	*E1230SS*
Volts	120 VAC	120 VAC
Hz	60	60
Amps	2.63	3.13
Max. CFM	300	500
Sones (Low speed)	2.0	4.5
Sones (High speed)	6.2	8.5
Ducting Size	6" round	6" round
2 Shielded Halogen Bulbs	Type T3, 12 V, 20 W Max., with G-4 Base	Type T3, 12 V, 20 W Max., with G-4 Base
Warranty	1 year	1 year

DIMENSIONS

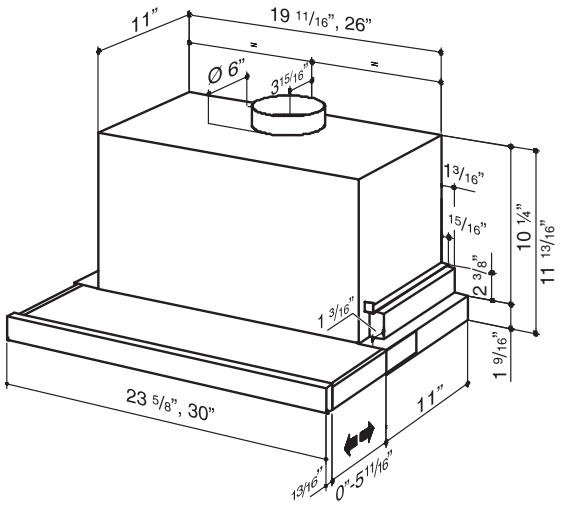

AIR FLOW PERFORMANCE

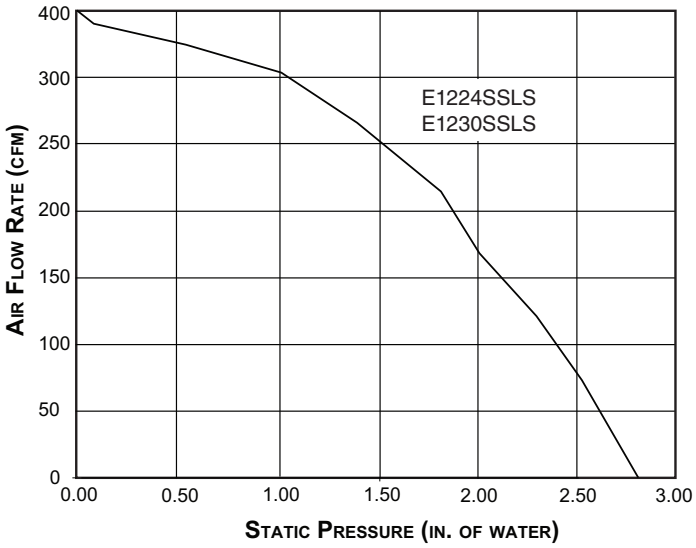

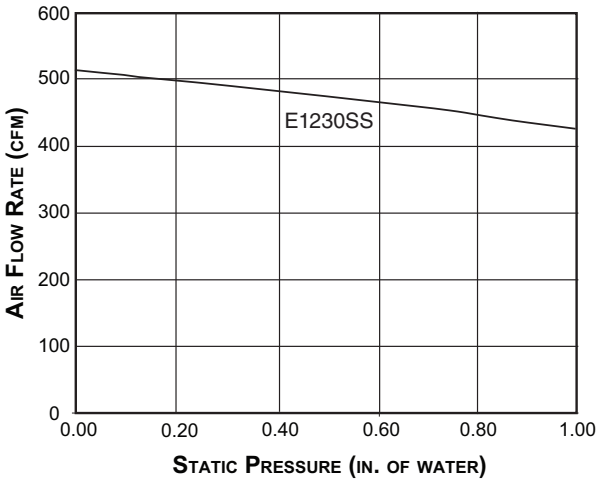

HVI-2100 CERTIFIED RATINGS comply with new testing technologies and procedures prescribed by the Home Ventilating Institute, for off-the-shelf products, as they are available to consumers. Product performance is rated at 0.1 in. static pressure, based on tests conducted in AMCA's state-of-the-art test laboratory. Sones are a measure of humanly-perceived loudness, based on laboratory measurements.

Venmar Ventilation ULC, Drummondville, Québec www.broan.ca 1-877-896-1119

Project	REMARKS
Location	
Model No.	
Qty.	
Submitted by	
Date	