BROAN® Elite

Under-Cabinet

ALTA

The sculpted lines of Alta™ bring an exciting, new choice to typical range hood shapes. Infrared controls and perimeter aspiration allow you to imagine new design possibilities while you experience the ultimate in capture efficiency.

SIZE	STAINLESS	GREASE FILTERS (replacement)	NON-DUCTED FILTERS
30 in.	EQLD130SS	HPFA52 (Type "H2")	HPF52 (Type "Xh2")
36 in.	EQLD136SS	HPFA52 (Type "H2")	HPF52 (Type "Xh2")

PERFORMANCE

Duct Orientation	Size	Damper	Sones			CFM		
			Normal	Medium	High	Normal	Medium	High
Vertical - Rectangular	3¼ in. x 14 in.	Included	< 0.3	3.0	7.5	130	295	445
Horizontal - Rectangular	3¼ in. x 14 in.	Included	< 0.3	3.0	7.5	130	310	500
Vertical - Rectangular	3¼ in. x 10 in.	Included	< 0.3	3.0	8.0	115	275	400
Horizontal - Rectangular	3¼ in. x 10 in.	Included	< 0.3	3.0	7.5	115	285	435
Round - Vertical	7 in.	Sold Separately	< 0.3	3.0	7.5	130	285	420

FEATURES

Control type	3-Speed Infrared
Delay off	yes
Filter Clean Reminder	yes
Heat Sentry™	yes
ADA Capable	yes
Lighting	3-level LED (included)
Grease Filter(s)	Peripheral
Installation Hardware	EZ1 Bracket
ENERGY STAR®	no
Recirculation	Non-ducted filters sold separately

AC INPUT

120 V, 60 Hz - 1.9 AMPS

OPTIONAL ACCESSORIES

7-in. Round Damper	BP87Q
ADA Wiring Kit	HAWRK3
Make-up Air Damper	MD6TU, MD8TU, or MD10TU
Remote Control	HCR3

MOUNTING HEIGHT

24 in. to 30 in. from cooktop to bottom of hood

LIMITED WARRANTY

1-year
3-year (LED modules only)
(See installation manual for full warranty text.)

FOR INDOOR USE ONLY

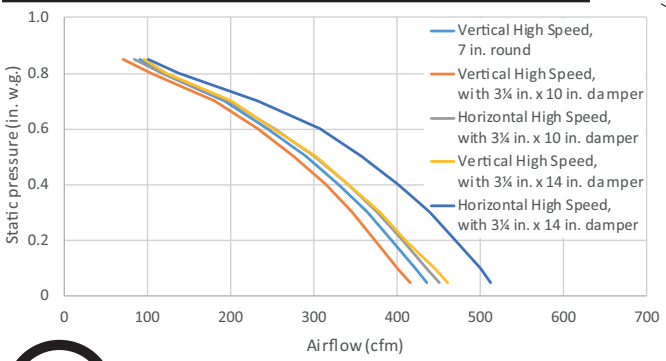

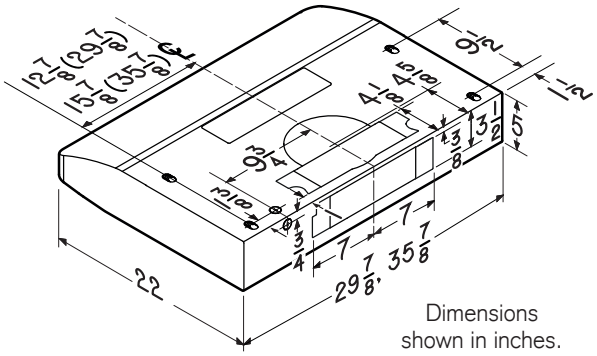

Dimensions shown in inches.

This product was tested by Broan-NuTone for airflow performance using the ANSI/AMCA 210 Standard, which is equivalent to the Home Ventilating Institute HVI 916 - Procedure for Air Flow Testing, and tested for sound performance using the ANSI S12.51 Standard, which is equivalent to the Home Ventilating Institute HVI 915 - Procedure for Loudness Rating of Residential Fan Products.

99045778C

Broan-NuTone LLC | 926 West State Street, Hartford, WI 53027 | 1-800-558-1711 | www.broan.com
Venmar Ventilation ULC | 550 Lemire Blvd., Drummondville, Québec Canada J2C 7W9 | 1-877-896-1119 | www.broan.ca

SPECIFICATION SHEET

ALTA - EQLD1 SERIES