NuTone

Under-Cabinet

ANANDA

NuTone brings you a bold new shape in a pro-style hood. The combination of high performance blower, deep canopy design and hybrid baffle filtration will satisfy even the most demanding cooks.

SIZE	STAINLESS	GREASE FILTERS (replacement)	NON-DUCTED FILTERS
30 in.	NPDP130SS	HPFA424 (Type B5)	HPF24 (Type Xb)

PERFORMANCE						
Duct Orientation	Size	Damper	Sones		CFM	
			Normal	High	Normal	High
Vertical - Rectangular	3¼ in. x 10 in.	Included	0.5	6.0	150	390
Horizontal - Rectangular	3¼ in. x 10 in.	Included	0.6	5.5	150	400
Round - Vertical	7 in.	Sold Separately	0.4	5.5	150	390

FEATURES	
Control type	2-speed Deluxe Rocker
Delay off	no
Filter Clean Reminder	no
Heat Sentry™	no
ADA Capable	yes
Lighting	1-level LED (included)
Grease Filters	Hybrid/Baffle (Qty. 2)
Installation Hardware	EZ1 brackets
ENERGY STAR®	no
Recirculation	Non-ducted filters sold separately

AC INPUT

120 V, 60 Hz - 1.4 AMPS

OPTIONAL ACCESSORIES	
7-in. Round Damper	BP87Q
ADA wiring kit	HAWRK3
Make-up Air Dampers	MD6TU, MD8TU and MD10TU

MOUNTING HEIGHT

18 in. to 30 in. from cooktop to bottom of hood

LIMITED WARRANTY

1-year
3-year (LED modules only)
See installation manual for full warranty text.

FOR INDOOR USE ONLY

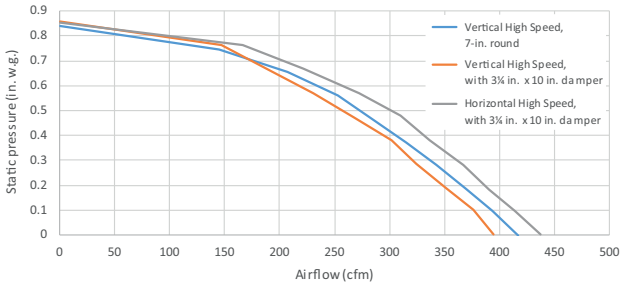

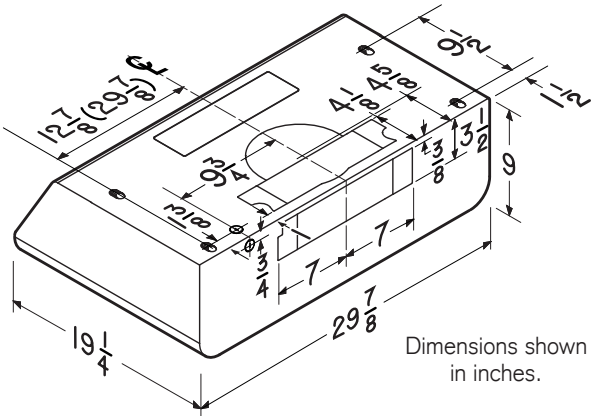

Dimensions shown in inches.

HVI-2100 CERTIFIED RATINGS comply with new testing technologies and procedures prescribed by the Home Ventilating Institute, for off-the-shelf products, as they are avaialable to consumers. Product performance is rated at 0.1 in. static pressure, based on tests conducted in AMCA's state-of-the-art test laboratory. Sones are a measure of humanly-perceived loudness, based on laboratory measurements.

99045800E

Broan-NuTone LLC | 926 West State Street, Hartford, WI 53027 | 1 888-336-3948 | www.nutone.com
Venmar Ventilation ULC | 550 Lemire Blvd., Drummondville Québec Canada J2C 7W9 | 1 877-896-1119 | www.nutone.ca

SPECIFICATION SHEET
ANANDA - NPDP1 SERIES