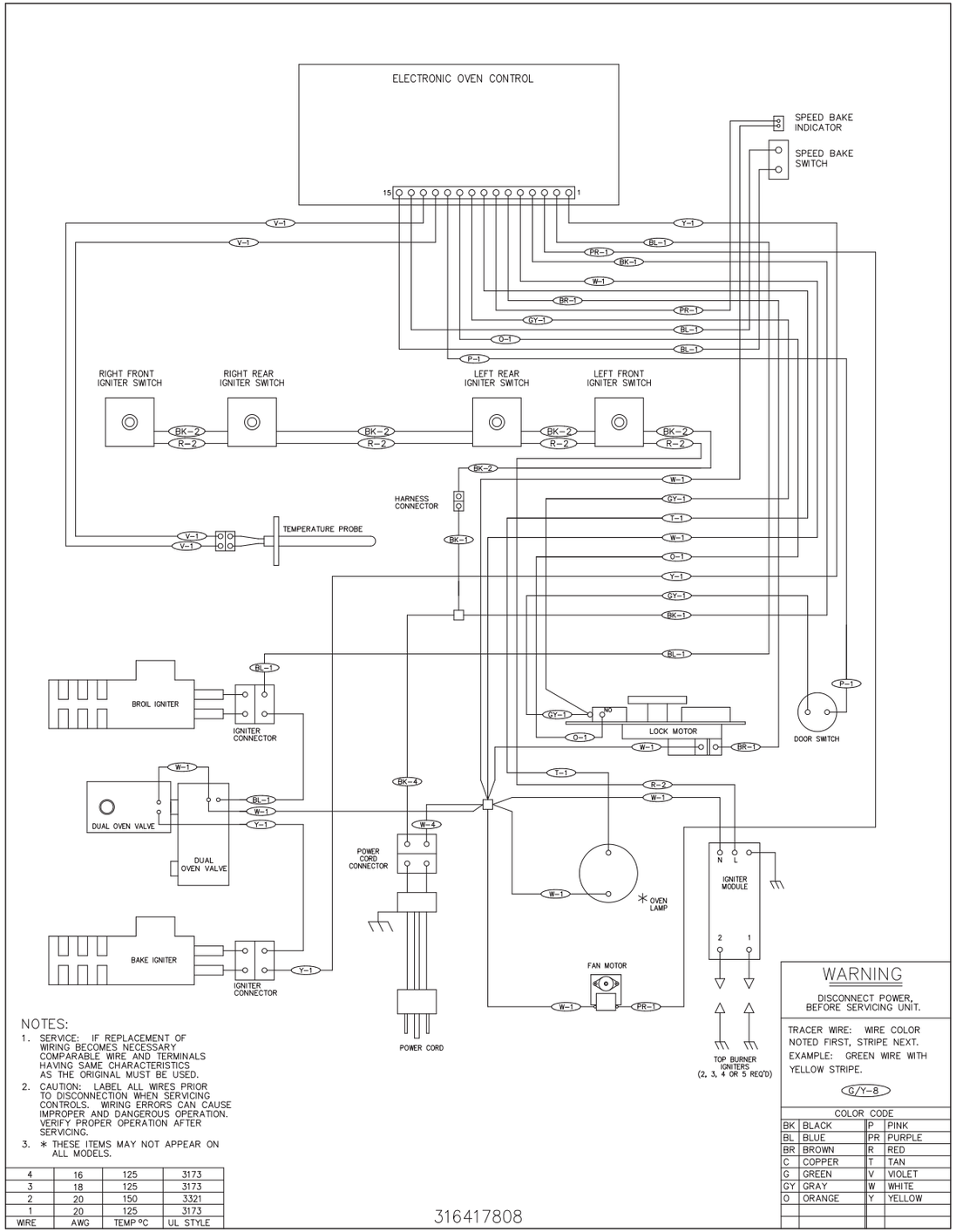

NOTES:

1. SERVICE: IF REPLACEMENT OF WIRING BECOMES NECESSARY COMPARABLE WIRE AND TERMINALS HAVING SAME CHARACTERISTICS AS THE ORIGINAL MUST BE USED.
2. CAUTION: LABEL ALL WIRES PRIOR TO DISCONNECTION WHEN SERVICING CONTROLS. WIRING ERRORS CAN CAUSE IMPROPER AND DANGEROUS OPERATION. VERIFY PROPER OPERATION AFTER SERVICING.
3. * THESE ITEMS MAY NOT APPEAR ON ALL MODELS.

WIRE	AWG	TEMP °C	UL STYLE
4	16	125	3173
3	18	125	3173
2	20	150	3321
1	20	125	3173

316417808

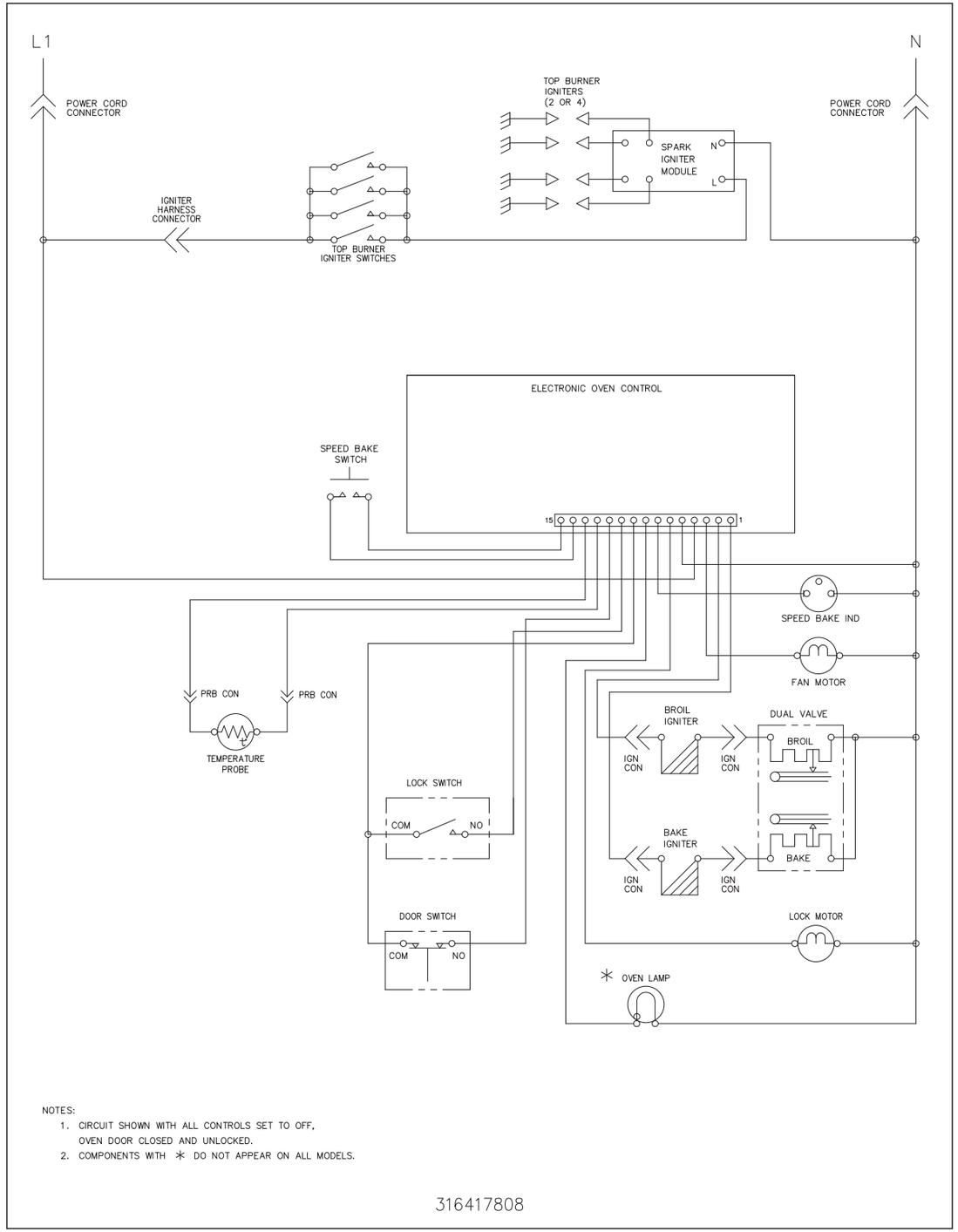

NOTES:

1. CIRCUIT SHOWN WITH ALL CONTROLS SET TO OFF, OVEN DOOR CLOSED AND UNLOCKED.
2. COMPONENTS WITH * DO NOT APPEAR ON ALL MODELS.

316417808