All about the Use & Care of your Dryer

TABLE OF CONTENTS

Important Safety Instructions..... 2-5
Operating Instructions..... 6-12
Care and Cleaning..... 13
Solutions to Common Inquiries..... 14
Avoid Service Checklist 15
Warranty 16
Français..... 17
Español xx

A07504601A (1610)

www.frigidaire.com USA 1-800-944-9044 www.frigidaire.ca Canada 1-800-265-8352

WARNING

FIRE OR EXPLOSION HAZARD

Failure to follow safety warning exactly could result in serious injury, death, or property damage.

Do not store or use gasoline or other flammable vapors and liquids in the vicinity of this or any other appliance.

WHAT TO DO IF YOU SMELL GAS:

- **Do not try to light any appliance.**
- **Do not touch any electrical switch; do not use any phone in your building.**
- **Clear the room, building or area of all occupants.**
- **Immediately call your gas supplier from a neighbor's phone. Follow the gas supplier's instructions.**
- **If you cannot reach your gas supplier, call the fire department.**
- **Installation and service must be performed by a qualified installer, service agency or the gas supplier.**

⚠ WARNING

Please read all instructions before using this dryer.

Recognize safety symbols, words and labels

Safety items throughout this manual are labeled with a WARNING or CAUTION based on the risk type as described below:

Definitions

⚠ This is the safety alert symbol. It is used to alert you to potential personal injury hazards. Obey all safety messages that follow this symbol to avoid possible injury or death.

⚠ DANGER

DANGER indicates an imminently hazardous situation which, if not avoided, will result in death or serious injury.

⚠ WARNING

WARNING indicates a potentially hazardous situation which, if not avoided, could result in death or serious injury.

⚠ CAUTION

CAUTION indicates a potentially hazardous situation which, if not avoided, may result in minor or moderate injury.

➡ IMPORTANT

IMPORTANT indicates installation, operation or maintenance information which is important but not hazard-related.

Product Record

Record Your Model and Serial Numbers
The model and serial numbers of your dryer are found on the dryer serial plate located inside the door opening. Record and retain these numbers.

Model Number _____

Serial Number _____

Purchase Date _____

Read all instructions before using this appliance. This book contains valuable information about:

- Operation
- Care
- Service

Keep it in a safe place.

This *Use and Care Guide* provides general operating instructions for your dryer. It also contains information about features for several other models. Your washer may not have every feature included.
Use the washer only as instructed in this *Use & Care Guide*.

NOTE

The instructions appearing in this ***Use and Care Guide*** are not meant to cover every possible condition and situation that may occur. Common sense and caution must be practiced when installing, operating and maintaining any appliance.

Save these instructions for future reference.

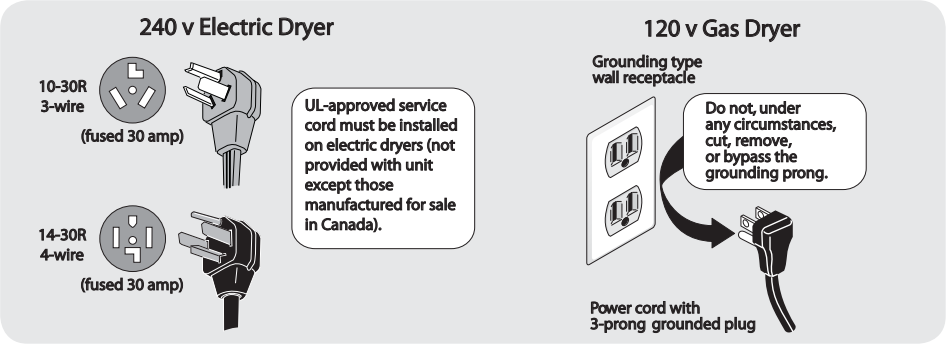

Avoid fire hazard or electrical shock. Do not use an adaptor plug or extension cord or remove grounding prong from electrical power cord. Failure to follow this warning can cause serious injury, fire or death.

⚠WARNING - RISK OF FIRE

To reduce the risk of fire, electrical shock, or injury to persons when using this dryer, comply with the basic warnings listed below. Failure to comply with these warnings could result in serious personal injuries.
You can be killed or seriously injured if you don't follow these Important Safety Instructions:

PREVENT FIRE

- Do not dry items that have been previously cleaned in, soaked in, or spotted with gasoline, cleaning solvents, kerosene, waxes, etc. Do not store these items on or near the dryer. These substances give off vapors that could ignite or explode.
- Do not place items exposed to cooking oils in your dryer. Items contaminated with cooking oils may contribute to a chemical reaction that could cause a load to catch fire.
- Do not dry articles containing rubber, plastic or similar materials such as bras, galoshes, bath mats, rugs, bibs, baby pants, plastic bags and pillows that may melt or burn. Some rubber materials, when heated, can under certain circumstances produce fire by spontaneous combustion.

⚠WARNING

FIRE HAZARD

Clean the lint screen before or after each load. The interior of the dryer, lint screen housing and exhaust duct should be cleaned approximately every 18 months by qualified service personnel. An excessive amount of lint build-up in these areas could result in inefficient drying and possible fire. See Care and Cleaning.

⚠WARNING

FIRE HAZARD

A clothes dryer produces combustible lint. The dryer must be connected to an outdoors exhaust. Regularly inspect the outdoor exhaust opening and remove any accumulation of lint around the opening and in the surrounding area.

- Do not operate the dryer if the lint screen is blocked, damaged or missing. Fire hazard, overheating and damage to fabrics can occur.
- Do not obstruct the flow of ventilating air. Do not stack or place laundry or throw rugs against the front or back of the dryer.
- Do not spray any type of aerosol into, on or near dryer at any time.
- Do not use fabric softeners or products to eliminate static unless recommended by the manufacturer of the fabric softener or product.
- Do not continue to use the dryer if you hear squeaking, grinding, rubbing or other unusual noises. This could be a sign of mechanical breakdown and lead to fire or serious injury. Contact a qualified technician immediately.
- Failure to comply with these warnings could result in fire, explosion, serious bodily injury and/or damage to the rubber or plastic parts of the dryer.

PROTECT CHILDREN

- Do not allow children to play on or in the dryer. Close supervision of children is necessary when the dryer is used near children. As children grow, teach them the proper, safe use of all appliances.
- Destroy the carton, plastic bag and other packing materials after the dryer is unpacked. Children might use them for play. Cartons covered with rugs, bedspreads or plastic sheets can become airtight chambers.
- Keep laundry products out of children's reach. To prevent personal injury, observe all warnings on product labels.
- Before the dryer is removed from service or discarded, remove the dryer door to prevent accidental entrapment.
- Failure to comply with these warnings could result in serious personal injuries.

PREVENT INJURY

- To prevent shock hazard and assure stability during operation, the dryer must be installed and electrically grounded by a qualified service person in accordance with local codes. Installation instructions are packed in the dryer for the installer's reference. Refer to INSTALLATION INSTRUCTIONS for detailed grounding procedures. If the dryer is moved to a new location, have it checked and reinstalled by a qualified service person.
- To prevent personal injury or damage to the dryer, the electrical power cord of a gas dryer must be plugged into a properly grounded and polarized 3-prong outlet. The third grounding prong must never be removed. Never ground the dryer to a gas pipe. Do not use an extension cord or an adaptor plug.
- ALWAYS disconnect the dryer from the electrical supply before attempting any service or cleaning. Failure to do so can result in electrical shock or injury.
- Do not use any type spray cleanser when cleaning dryer interior. Hazardous fumes or electrical shock could occur.
- To prevent injury, do not reach into the dryer if the drum is moving. Wait until the dryer has stopped completely before reaching into the drum.

PREVENT INJURY AND DAMAGE TO THE DRYER

- All repairs and servicing must be performed by an authorized servicer unless specifically recommended in this Owner's Guide. Use only authorized factory parts.
- Do not tamper with controls.
- Do not sit on, step on or stand on the dryer. Do not rest heavy loads on top. The dryer is not meant to support weight.
- Do not install or store the dryer where it will be exposed to the weather.
- A thermal limiter switch automatically turns off the motor in the unlikely event of an overheated situation (electric dryers only). A service technician must replace the thermal limiter switch after correcting the fault.
- Failure to comply with these warnings could result in serious personal injuries.

Read all instructions before operating this dryer.

⚠ CAUTION

The California Safe Drinking Water and Toxic Enforcement Act requires the Governor of California to publish a list of substances known to the state to cause cancer, birth defects or other reproductive harm, and requires businesses to warn customer of potential exposure to such substances. Included in this list are soot and carbon monoxide, both of which may be produced by the use of this product.

Normal Operating Sounds

You may or may not hear the following sounds from your new dryer:

A. SUSPENSION ROLLERS The dryer drum is supported by a set of suspension rollers. At times there may be a thumping or rolling sound when the dryer starts. This may happen if the dryer has not been in use for a period of time, or after a heavy load has remained in the dryer drum for an extended period, creating a temporary flat spot on the edge of the roller. The noise should dissipate as the dryer operates and the flat spots smooth out.

B. AIR FLOW SYSTEM Your dryer is equipped with a high volume air handling system. In some installations there may be some sounds associated with air movement throughout the dryer, including the air duct, blower, and exhaust system. This is normal and can vary with load size and type.

C. GAS VALVE (Gas models only.) The flow of gas is controlled by electric solenoids. During operation there may be a clicking sound as the valve opens and closes to control the gas flow.

D. GAS BURNER (Gas models only.) When the burner is operating, there may be sounds generated as the air flow mixes with the gas flame. This noise is normal and will only occur when the gas is ignited in the combustion tube.

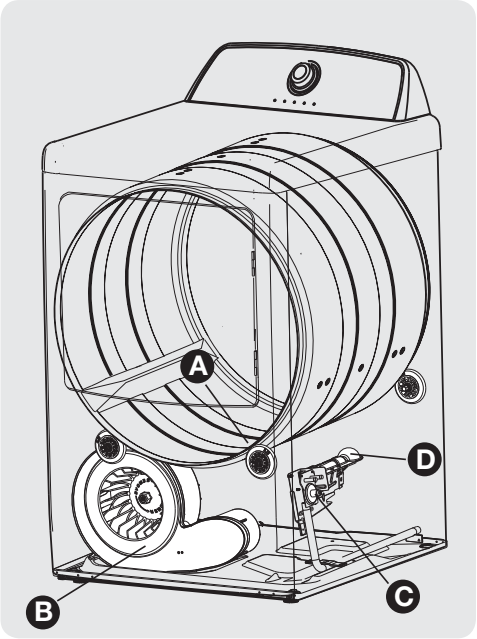

⚠ CAUTION

Do not continue to use the dryer if you hear squeaking, grinding, rubbing or other unusual noises. This could be a sign of mechanical breakdown and lead to fire or serious injury. Contact a qualified technician immediately.

Operating Your Dryer

⚠ WARNING

To reduce the risk of fire, electric shock or injury to persons, read the IMPORTANT SAFETY INSTRUCTIONS in this Use and Care Guide before operating your dryer.

1 Prepare load for drying.

- Dry items of similar fabric, weight and construction in the same load.
- Separate dark items from light-colored items. Separate items that shed lint from those that attract lint.
- Check for stains which may not have been removed in washing. Repeat stain removal process and wash again before drying. Dryer heat may permanently set some stains.
- Place delicate or small items in a mesh bag.
- Be sure buckles, buttons and trim are heatproof and won't damage the drum finish. Close zippers, button buttons, fasten hooks and Velcro®-like fasteners. Tie strings and sashes to prevent snagging and tangling.

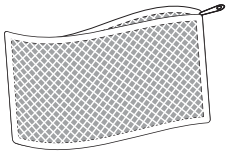

(Mesh bag not included.)

2 Check that the lint filter is clean and in place.

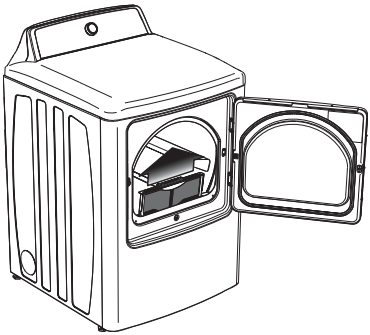

⚠ CAUTION

Do not operate dryer without lint filter in place.

3 Load the dryer and close the door.

- Load items loosely. The average wet load will fill the drum 1/3 to 1/2 full. Items need room to tumble freely for even drying and less wrinkling.
- If desired, place a dryer fabric softener sheet on top of the load at the beginning of the cycle.
- To save energy and time and avoid uneven drying and wrinkling, do not overload the dryer.
- When drying large items, dry only two or three items at a time. Fill out the load with small and medium sized items.
- For delicate or very small loads, add two or three similar items to improve tumbling action.

4 Select the appropriate cycle and settings for each load.

- See *Dryer Operating Instructions* on following pages.

5 Start the dryer.

- Close the dryer door. The dryer will not operate with the door open.
- Press the **POWER** button to turn on the unit.
- Turn the cycle selector in either direction to scroll to the desired cycle. The indicator for that cycle will be illuminated. See the "Cycle Selection" section in this guide for descriptions of each cycle.
- The estimated cycle time, preset drying temperature, dryness level, and options for each cycle will be indicated for the cycle displayed. See the "Cycle Settings" and "Dryer Settings Chart" in this guide for descriptions and available settings for each cycle.
- To change the settings, press the **Temp** and **Dryness** buttons to scroll to the desired settings.
- To select or deselect an option, press the button for that option. The indicator will be illuminated when the option has been selected. The indicator will no longer be lighted when the option has been deselected.
- After making your selections, press **START** to begin the cycle.
- To add or remove items when the dryer is running, press the **Pause** button to pause the cycle and open the door. Opening the door with a cycle running will also pause the cycle. Allow the drum to come to a complete stop before reaching inside. Add or remove the item, close the door and push the **START** button again, continuing the current cycle.
- To cancel a running cycle, press the **POWER** button.
- A signal will sound at the end of the cycle if the chime option has been selected.

NOTE

If drying a single large or bulky item, such as a comforter, remove the item part way through the cycle and turn it "inside out" to maximize drying effectiveness. Place item back in dryer and re-start cycle.

6 When the cycle ends, remove items immediately and hang or fold.

IMPORTANT

Clean the lint filter after every load.

OPERATING INSTRUCTIONS

Cycle Selection

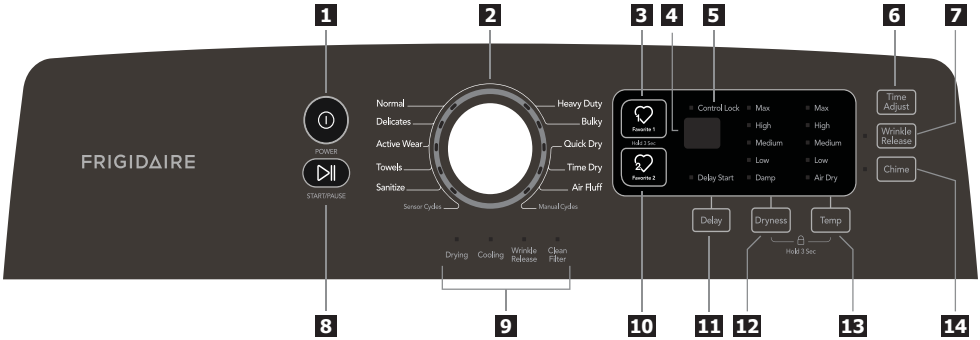

1	POWER	**2**	Cycle Selector	**3**	Favorite Cycle 1
4	LED Display	**5**	Control Lock Indicator	**6**	Time Adjust
7	Wrinkle Release	**8**	START/PAUSE	**9**	Cycle Status Display
10	Favorite Cycle 2	**11**	Delay Start	**12**	Dryness Level
13	Temperature	**14**	Chime		

This manual covers many models and not all cycles, options, or features listed are available on every model. Console shown above for reference only. Your model may differ.

SELECTING THE RIGHT CYCLE TO SAVE ENERGY

This dryer has been specifically designed with options to help you save energy and at the same time utilize the optimal drying setting for your clothing.

Some cycles save more energy than others. Cycles that use the least amount of heat save the most energy. Use the lowest heat setting (auto and timed dry cycles) and lowest dryness level (auto dry cycles) to save on energy and prevent over drying your clothing.

For best results

Follow the fabric care label instructions on items to be dried.

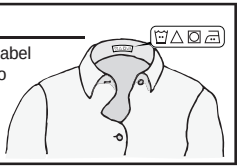

Press the **POWER** button to turn on the unit. Turn the cycle selector in either direction to scroll through the cycles.

To change the cycle once it has begun, press the **POWER** button before selecting a new cycle. Just turning the cycle selector will not change the cycle.

Cycle Selection, continued

Sensor Dry Cycles

Sensor Dry cycles take the guesswork out of selecting the correct drying time for each load. Moisture sensing bars in the front of the dryer drum sense the moisture level of the load as it tumbles through the heated air. With Sensor Dry cycles, the load will automatically be dried at the selected temperature to the desired dryness level.

Sensor Dry cycles save time and energy and protect fabrics. When the load has reached the selected dryness level, it will continue to tumble, unheated, during a cool down period. This helps reduce wrinkling and makes items easier to handle during unloading.

NOTE

Initial cycle times for Sensor Dry cycles are only estimates. Actual drying time may be longer or shorter than displayed time.

Drying time varies depending on size and dampness of load and fabric type. If the load is too small or almost dry, the moisture sensing bars may not detect enough moisture to continue the cycle and the cycle may end after a few minutes. If this occurs, then select the **Time Dry** cycle to dry such loads.

Room temperature and humidity, type of installation and electrical voltage or gas pressure can also affect drying time.

Normal
Select this cycle to dry everyday fabrics including cottons, linens and sheets.

Delicates
Select this cycle to dry knits and delicates.

Active Wear
Select this cycle to dry lightweight, synthetic apparel worn for working out, running, swimming, cycling, tennis and similar activities, including stretch fabrics. Fabric softeners reduce wicking and are not recommended for garments made to pull moisture away from the body.

Towels
Select this cycle to dry heavy loads such as towels and non-rubber-backed bath mats.

Sanitize
Recommended for durable fabrics and towels. Use this cycle to remove harmful bacteria from your clothing or other items where sanitization is desired.

This option will kill 99.9% of bacteria. A higher temperatures is required to kill bacteria. Please check fabric care labels to prevent damage.

Heavy Duty
Select this cycle to dry durable garments - ex. towels, sports gear, fabric tote bags, jeans, or overalls.

Bulky
Select this cycle to dry bedding and bulky items such as comforters, blankets, sleeping bags and parkas.

Manual Dry Cycles

Quick Dry
Select this cycle to quickly dry a small load.

Time Dry
To manually select the drying time for any load, scroll the cycle selector indicator to **Time Dry**. Drying time can be adjusted by repeatedly pressing the **Time Adjust** button. Drying time will be displayed. Select any drying temperature. Because this is not a Sensor Dry cycle, you will not be able to select a dryness level.

WARNING

FIRE HAZARD

To avoid fire hazard, do not use heat to dry items containing feathers or down, foam rubber, plastics similarly textured, rubber-like materials. Use the **Time Dry** cycle and the **Air Dry** (no heat) setting.

Air Fluff
Select this cycle to refresh clothing, stuffed animal, pillows or blankets, and to dust draperies. No heat will be applied to the load as it tumbles.

Cycle Settings

Select appropriate drying temperature and dryness level settings suitable for each load. Make selections based on load size, dampness and fabric type and durability.

The settings can be changed before the cycle is started. If changes are attempted after the cycle starts, the lights will flash and a signal will beep, but the cycle will continue.

NOTE

To change the temperature or dryness level once the cycle has begun, press the **PAUSE** button, make the new selection and press **START** again.

Drying Temperature

To change the preset temperature on Manual Dry cycles, press the **Temp** button to scroll to the desired setting.

NOTE

To protect your fabrics and save energy, temperature levels are preset on Sensor cycles and cannot be adjusted.

Max
Recommended for towels, heavy duty loads, and durable fabrics.

High
Recommended for most cotton fabrics.

Medium
Recommended for wrinkle free, easy care, lightweight fabrics and bulky loads.

Low
Recommended for knits and delicate fabrics.

Air Dry
The **Air Dry** setting tumbles the load without heat. Use this setting to dry items containing feathers, down, foam rubber, plastics or rubber-like materials.

Dryness Level

To change the preset level, press the **Dryness** button to scroll to the degree of dryness desired.

Occasionally a load may seem too damp or over-dried at the end of the cycle. To increase drying time for similar loads in the future, select **Max** or **High**. For loads requiring less drying time, select **Low**.

Select **Damp** for items you wish to partially dry before hanging or ironing.

Cycle Options

To select an option, press the corresponding option button to illuminate the desired option. To deselect an option, press the option button again and the indicator light will turn off.

Not all options are available on every model. To protect your fabrics, not all options are available with every cycle. If an option is not appropriate for the cycle, the indicator will not light.

NOTE

To change options once the cycle has begun, press the **PAUSE** button, make the new selection and press **START** again.

Wrinkle Release

Select **Wrinkle Release** if the dried load might not be removed promptly at the end of the cycle. The dry load will continue tumbling without heat to help reduce wrinkling. When **Chime** is selected, a beep will be heard periodically. The load may be removed any time during **Wrinkle Release**.

Chime

A signal will sound at the end of the cycle (and periodically during **Wrinkle Release**) if this option is selected.

Other Features

POWER
Turn you dryer on, off, or cancel the current cycle with the **POWER** button. If the dryer is left on for more than ten minutes without pressing the **START** button, the dryer will automatically turn off.

Control Lock
To avoid having someone accidentally start or stop the dryer, press **Dryness** and **Temp** at the same time and hold for **3** seconds. The **Control Lock** indicator light will be illuminated. To remove the control lock, press and hold **Dryness** and **Temp** again.

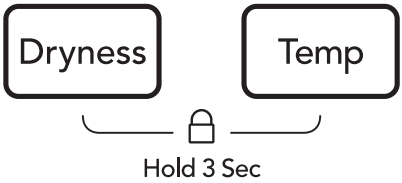

Estimated Time Remaining
The estimated cycle time for **Sensor Dry** cycles and the actual time for **Manual Dry** cycles will be displayed when the cycle is selected. The estimated remaining cycle time is displayed during the cycle. The initial display may be "- -" for some cycles.

Favorite 1 / Favorite 2
To program a custom drying cycle with your preferred settings and options use the **Favorite** option. After selecting the desired cycle and settings, press and hold either **Favorite** button for **3** seconds to store it. Recall your favorite cycle each time you press and release the **Favorite** button.

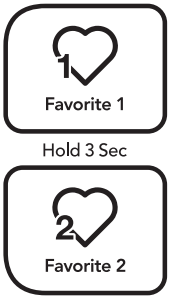

Delay Start
Press **Delay** to select a dry time convenient to your schedule or during off peak energy hours. Continue to press the button to add hours to the delay time. The delay time selected will be displayed and begin counting down when you press the **START** button. The cycle can be delayed from 1 to 24 hours in 1 hour increments. To cancel a delayed start, press the **POWER** button to turn the unit off. Once you press **START** after entering a delay time you cannot modify the cycle or options. To make changes, cancel the delay by pressing the **POWER** button, make your adjustments, add your delay and press **START** again to begin the delay countdown.

Status Lights
The following indicators may be lighted during the cycle, indicating the current phase of the wash cycle:

- Drying
- Cooling
- Wrinkle Release
- Clean Filter

Reversible Door
Your dryer is equipped with a reversible door. The door can be hinged on the right or left side.

NOTE

For step-by-step instructions on DOOR REVERSAL, refer to the ***Installation Instructions*** supplied with this dryer.

Dryer Settings Chart

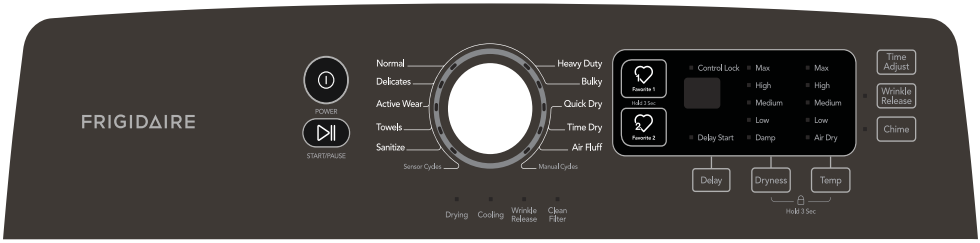

These temperatures and options are available with the following cycles:

	Normal	Delicates	Active Wear	Towels	Sanitize	Heavy Duty	Bulky	Quick Dry	Time Dry	Air Fluff
Temp										
Max	✓			✓	✓	✓		✓	✓	
High							✓	✓	✓	
Medium		✓	✓					✓	✓	
Low								✓	✓	
Air Dry								✓	✓	✓
Dryness										
Max	✓			✓	✓	✓	✓			
High	✓	✓	✓	✓		✓	✓			
Medium	✓	✓	✓	✓		✓	✓			
Low	✓	✓	✓	✓		✓	✓			
Damp	✓	✓	✓	✓		✓	✓			
Options										
Favorite 1	✓	✓	✓	✓	✓	✓	✓	✓	✓	✓
Favorite 2	✓	✓	✓	✓	✓	✓	✓	✓	✓	✓
Time Adjust								✓	✓	✓
Wrinkle Release	✓	✓	✓	✓	✓	✓	✓	✓	✓	✓
Chime	✓	✓	✓	✓	✓	✓	✓	✓	✓	✓
Delay Start	✓	✓	✓	✓	✓	✓	✓	✓	✓	✓

✓ = Available selections. ▭ = Factory presets. ■ = Non-modifiable presets.

Cleaning Instructions

⚠ WARNING

FIRE HAZARD

A clothes dryer produces combustible lint. The dryer must be connected to an outdoors exhaust. Regularly inspect the outdoor exhaust opening and remove any accumulation of lint around the opening and in the surrounding area.

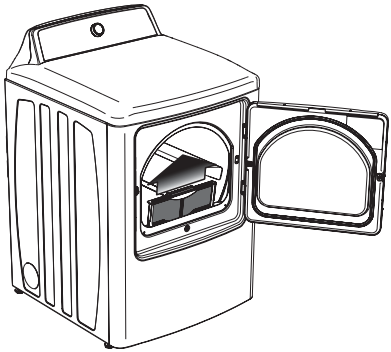

➡ IMPORTANT

Clean the lint filter after every load.

➡ IMPORTANT

Do not store or place laundry products on top of dryer at any time. They can damage the finish or controls.

⚠ WARNING

To reduce risk of fire or serious injury to persons or property, comply with the basic warnings listed in the Important Safety Instructions and those listed below.

- Before cleaning the dryer interior, unplug the electrical power cord to avoid electrical shock hazards.
- Do not use any type spray cleanser when cleaning the dryer interior. Hazardous fumes or electrical shock could occur.

INSIDE

- Clean the lint filter after every load. Lint build-up on the filter restricts air flow, which causes longer drying times. The filter is located at the bottom of the door opening. Remove by pulling straight up. Remove the lint and replace the filter.
- Occasionally a waxy build-up may form on the lint filter and/or moisture sensing bars from using dryer-added fabric softener sheets. To remove this build-up, wash them with warm, soapy water. Dry the filter thoroughly and replace. Do not operate the dryer without the lint filter in place.
- If the dryer drum becomes stained from noncolorfast fabrics, clean the drum with a damp cloth and a mild liquid household cleanser. Remove cleanser residue before drying the next load.
- Every 18 months an authorized servicer should clean the dryer cabinet interior and exhaust duct. These areas can collect lint and dust over time. An excessive amount of lint build-up could result in inefficient drying and possible fire hazard.

OUTSIDE

- Clean the cabinet with mild soap and water. Never use harsh, gritty or abrasive cleansers.
- If the cabinet becomes stained, clean with diluted chlorine bleach (1 part bleach to 8 parts water). Rinse several times with clear water.
- Remove glue residue from tape or labels with a mixture of warm water and mild detergent. Or, touch residue with the sticky side of the tape or label.
- Before moving the dryer, place a strip of cardboard or thin fiberboard under the front leveling legs to prevent damage to the floor.

SOLUTIONS TO COMMON DRYING INQUIRIES

Many drying problems involve poor cleaning results, poor soil and stain removal, residues of lint and scum, and fabric damage. For satisfactory drying results, follow these suggestions provided by The Soap and Detergent Association.

PROBLEM	POSSIBLE CAUSES	SOLUTIONS	PREVENTIVE MEASURES
Greasy, oily stains	• Fabric softener sheet.	• Rub fabric softener stains with bar soap. Rinse and rewash.	• Add a few bath towels to small loads for proper tumbling. • Some “silk-like” fabrics should be air dried. • Use proper drying temperature. • Place fabric softener sheet on top of load before starting the dryer.
Lint	• Overloading. • Overdrying causes static electricity. • Lint screen not clean when cycle began. • Lint is attached to “pills.”	• Reduce load size and rewash using liquid fabric softener in the final rinse. • Or, add a fabric softener sheet and tumble without heat. • Use lint brush or roller to remove lint.	• Do not overload dryer. • Use fabric softener in washer or dryer to reduce static electricity. • Remove items when they are slightly damp to avoid overdrying. • Check that lint filter is clean and in place.
Pilling (Fibers break off, ball up and cling to fabric.)	• Overdrying.	• Use a lint brush or shaver to remove pills.	• Use fabric softener to lubricate fibers. • When ironing, use spray starch or fabric finish on collars and cuffs. • Turn items inside out to reduce abrasion.
Shrinking	• Temperature too high. • Overdrying.	• Irreversible condition.	• Follow fabric care label directions. • If shrinking is a concern, check load often. • Remove items while slightly damp and hang or lay flat to complete drying. • Block knits into shape.
Wrinkling	• Overloading. • Leaving items in dryer after cycle ends.	• Reduce load size and tumble at medium or low heat for 5-10 minutes. • Remove items immediately. Hang or fold.	• Do not overload dryer. • Remove items as soon as cycle ends.

Before calling for service, review this list. It may save both time and expense. The list includes common occurrences that are not the result of defective workmanship or materials in this dryer.

OCCURRENCE	POSSIBLE CAUSE	SOLUTION
Dryer does not start.	Electrical power cord is not securely plugged in or plug may be loose.	Make sure the plug fits tightly in wall outlet.
	House fuse blown or circuit breaker tripped.	Reset circuit breaker or replace fuse.
		Make sure electrical line is not overloaded and the dryer is on a separate circuit.
	Thermal limiter tripped.	Call authorized service person for replacement.
	Delay Start inadvertently activated	Ensure Delay Start not activated.
	Door may be open. Unit will not operate with door open.	Ensure door is closed.
Dryer runs but won't heat.	There are 2 house fuses in the dryer circuit. If 1 of the 2 fuses is blown, the drum may turn but the heater will not operate. (electric models)	Replace fuse.
	Gas supply valve is not open (gas models).	Check to make sure supply valve is open. See INSTALLATION INSTRUCTIONS for procedure.
	Dryer does not have enough air supply to support the burner flame (gas models).	See INSTALLATION INSTRUCTIONS.
	LP gas supply tank is empty or there has been a utility interruption of natural gas (gas models).	Refill or replace tank. Dryer should heat when utility service is restored.
Drying cycle takes too long, outside of the dryer feels too hot or smells hot.	Lint filter is clogged with lint.	Make sure all lint has been removed from the dryer lint filter before starting each cycle.
	Exhaust duct requirements have not been met.	Exhaust duct must be at least 4 inches in diameter and made of rigid or semi-rigid metal.
		When in place, the duct must have no more than four 90° bends and must not exceed length listed in INSTALLATION INSTRUCTIONS.
	Electric dryer is connected to a 208 volt circuit.	Drying time will be 20% longer than drying on a 240 volt circuit.
	Drying procedures have not been followed.	See "Operating Instructions."
	Outside exhaust hood or exhaust duct may be clogged or restricted.	Clean out any obstruction.
	High humidity.	Use a dehumidifier near the dryer.
Excess moisture in drum between cycles	Exhaust damper stuck open or not present.	Fix or clean the damper, or install new one.
Excessive wrinkling.	Dryer is overloaded.	Do not overload. See "Operating Instructions."
	Items left in dryer too long.	Remove items as soon as cycle ends.
	Insufficient sorting of items.	See "Operating Instructions."
	Drying temperature too high.	Follow fabric care label instructions.
Scratching or chipping of the drum finish.	Foreign objects such as coins, pins, clips or buttons are inside the dryer.*	Always remove foreign objects from pockets before laundering. Remove objects from drum and restart dryer.
	Permanently attached items such as belt buckles, zippers and fasteners may be hitting the inside of the drum.*	It may be necessary to sew a scrap of material securely around ornaments before drying to prevent scratching and damage to the dryer.

*Drum damage caused by foreign objects or permanently attached items is not covered by the warranty.

Error Codes

ERROR CODE	POSSIBLE CAUSE	SOLUTIONS
C9	PCB failed	• Call service - 1 800 944 9044.
E4	Humidity sensor failed	• Unit will complete the current cycle. • Unit can still operate Manual Cycles. • If situation continues, call service - 1 800 944 9044.
E5	Temperature sensor failed	• Call service - 1 800 944 9044.

MAJOR APPLIANCE WARRANTY INFORMATION

Your appliance is covered by a one year limited warranty. For one year from your original date of purchase, Electrolux will pay all costs for repairing or replacing any parts of this appliance that prove to be defective in materials or workmanship when such appliance is installed, used and maintained in accordance with the provided instructions.

Exclusions

This warranty does not cover the following:

1. Products with original serial numbers that have been removed, altered or cannot be readily determined.
2. Product that has been transferred from its original owner to another party or removed outside the USA or Canada.
3. Rust on the interior or exterior of the unit.
4. Products purchased “as-is” are not covered by this warranty.
5. Food loss due to any refrigerator or freezer failures.
6. Products used in a commercial setting.
7. Service calls which do not involve malfunction or defects in materials or workmanship, or for appliances not in ordinary household use or used other than in accordance with the provided instructions.
8. Service calls to correct the installation of your appliance or to instruct you how to use your appliance.
9. Expenses for making the appliance accessible for servicing, such as removal of trim, cupboards, shelves, etc., which are not a part of the appliance when it is shipped from the factory.
10. Service calls to repair or replace appliance light bulbs, air filters, water filters, other consumables, or knobs, handles, or other cosmetic parts.
11. Surcharges including, but not limited to, any after hour, weekend, or holiday service calls, tolls, ferry trip charges, or mileage expense for service calls to remote areas, including the state of Alaska.
12. Damages to the finish of appliance or home incurred during installation, including but not limited to floors, cabinets, walls, etc.
13. Damages caused by: services performed by unauthorized service companies; use of parts other than genuine Electrolux parts or parts obtained from persons other than authorized service companies; or external causes such as abuse, misuse, inadequate power supply, accidents, fires, or acts of God.

DISCLAIMER OF IMPLIED WARRANTIES; LIMITATION OF REMEDIES

CUSTOMER’S SOLE AND EXCLUSIVE REMEDY UNDER THIS LIMITED WARRANTY SHALL BE PRODUCT REPAIR OR REPLACEMENT AS PROVIDED HEREIN. CLAIMS BASED ON IMPLIED WARRANTIES, INCLUDING WARRANTIES OF MERCHANTABILITY OR FITNESS FOR A PARTICULAR PURPOSE, ARE LIMITED TO ONE YEAR OR THE SHORTEST PERIOD ALLOWED BY LAW, BUT NOT LESS THAN ONE YEAR. ELECTROLUX SHALL NOT BE LIABLE FOR CONSEQUENTIAL OR INCIDENTAL DAMAGES SUCH AS PROPERTY DAMAGE AND INCIDENTAL EXPENSES RESULTING FROM ANY BREACH OF THIS WRITTEN LIMITED WARRANTY OR ANY IMPLIED WARRANTY. SOME STATES AND PROVINCES DO NOT ALLOW THE EXCLUSION OR LIMITATION OF INCIDENTAL OR CONSEQUENTIAL DAMAGES, OR LIMITATIONS ON THE DURATION OF IMPLIED WARRANTIES, SO THESE LIMITATIONS OR EXCLUSIONS MAY NOT APPLY TO YOU. THIS WRITTEN WARRANTY GIVES YOU SPECIFIC LEGAL RIGHTS. YOU MAY ALSO HAVE OTHER RIGHTS THAT VARY FROM STATE TO STATE.

IF YOU NEED SERVICE

Keep your receipt, delivery slip, or some other appropriate payment record to establish the warranty period should service be required. If service is performed, it is in your best interest to obtain and keep all receipts. Service under this warranty must be obtained by contacting Electrolux at the addresses or phone numbers below.

This warranty only applies in the USA and Canada. In the USA, your appliance is warranted by Electrolux Major Appliances North America, a division of Electrolux Home Products, Inc. In Canada, your appliance is warranted by Electrolux Canada Corp. Electrolux authorizes no person to change or add to any obligations under this warranty. Obligations for service and parts under this warranty must be performed by Electrolux or an authorized service company. Product features or specifications as described or illustrated are subject to change without notice.

USA
1.800.944.9044
Electrolux Major Appliances
10200 David Taylor Drive
Charlotte, NC 28262

Electrolux

Canada
1.800.265.8352
Electrolux Canada Corp.
5855 Terry Fox Way
Mississauga, Ontario, Canada
L5V 3E4