CPF36UGGWH New product

Portofino

Portofino Pro-Style Gas Range,
White, 36” x 25”

EAN13: 8017709265236

PORTOFINO STYLE

Stainless steel control knobs

Triple Convection

Soft close oven door

Full-width continuous grates

Push-pull stainless steel storage compartment

GAS OVEN:

4 cooking modes

Programmable Timer with Touch display

Adjustable thermostat 120° - 500°F

Air-cooled triple-glazed removable door

Triple Convection

Oven capacity: 4.5 cu. ft.

Ever Clean enameled interior cavity

5 shelf positions

2 x halogen oven lights

GAS RANGETOP:

5 gas burners

Center-rear 4500 BTU

Center-front 10500 BTU

Right-rear 12000 BTU

Right-front 8000 BTU

Left double-inset super burner 20000 BTU

Heavy-duty cast iron grates

Automatic electric ignition

LP gas conversion kit included

SAFETY:

Gas safety valves

Air-cooled door to prevent overheating

Connected nominal power: 2 A - 200W

Voltage rating: 120V 60Hz

ACCESSORIES INCLUDED:

1 wok ring

1 deep oven tray

1 total-extraction telescopic guide

2 chrome shelves

Options

- **BGTR9** - Grill Plate
- **TPKTR9** - Teppanyaki Grill Plate
- **GT1T-2** - 1-Level Telescopic Shelf - Total Extraction

Versions

- **CPF36UGGX** - Stainless Steel
- **CPF36UGGR** - Red
- **CPF36UGGYW** - Yellow
- **CPF36UGGOR** - Orange
- **CPF36UGGBL** - Black
- **CPF36UGGOG** - Olive green
- **CPF36UGGAN** - Matte Black

SMEG U.S.A. INC.
A&D BUILDING
150 EAST 58th STREET, 7th FLOOR
NEW YORK, NY, 10155
Tel. +1 212 265 5378
Fax +1 212 265 5945

CPF36UGGWH

Portofino

36""
white
cooktops type: gas
oven type: gas

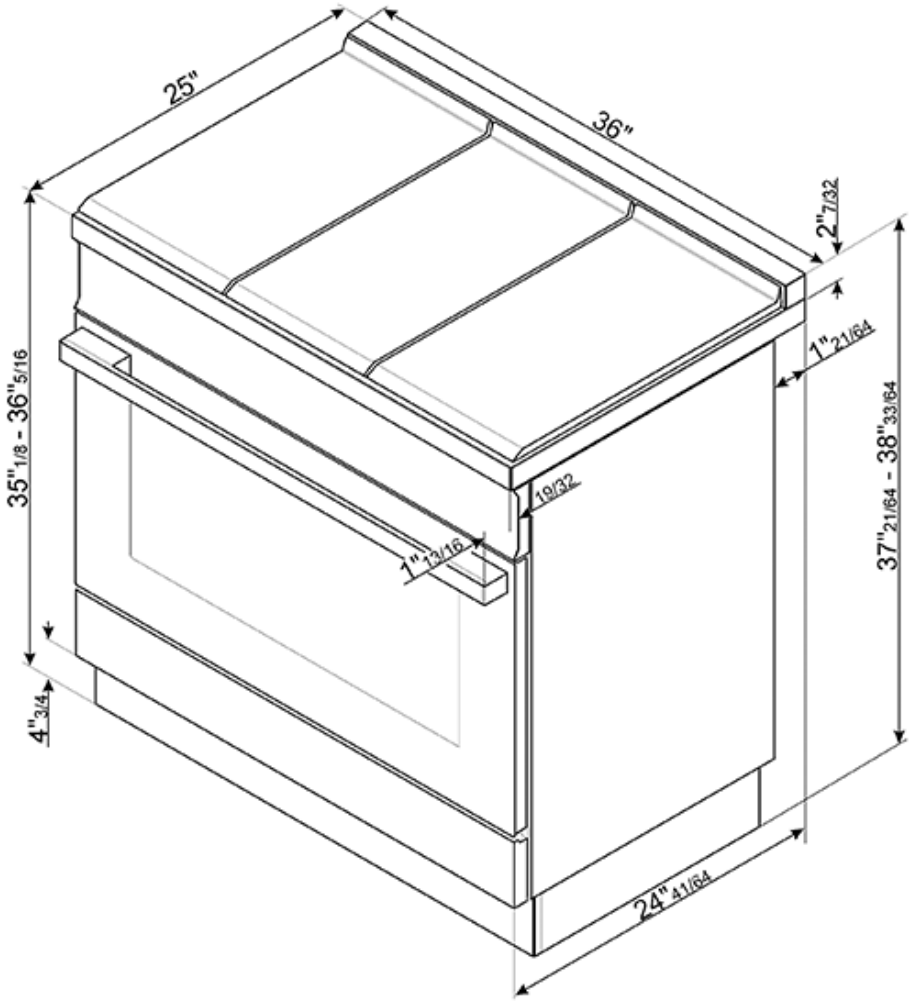

SMEG U.S.A. INC.
A&D BUILDING
150 EAST 58th STREET, 7th FLOOR
NEW YORK, NY, 10155
Tel. +1 212 265 5378
Fax +1 212 265 5945