SPR36UGGX

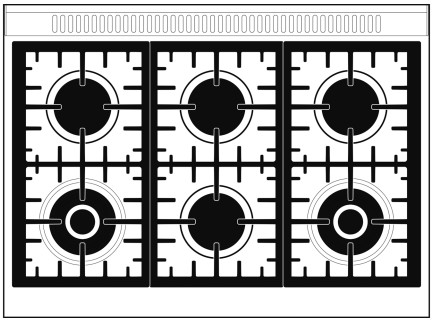

Cooktop technical features

Cooking zones	6
Front-left - 18000 BTU Rear-left - 10000 BTU Front-center - 10000 BTU Rear-center - 10000 BTU Front-right - 18000 BTU Rear-right - 10000 BTU	
Burner caps	Enameled matte black
Automatic gas ignition	Yes
Gas safety valves	Yes

Compact- design cooker with gas oven and gas hob: efficient and responsive, the visible heat source allows total control and choice of the right intensity.

Features

Gas hob - Gas provides permanent control of the heat source and the temperature change is immediate

Touch control - Easy and intuitive timer setting with a single touch

Tangential cooling - New cooling system with tangential fan and airflow from the door to the splashback

Soft close - The door is equipped with a specific system for silent closing

Product dimension drawing

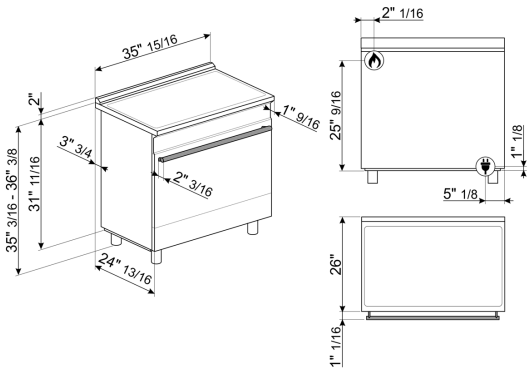

Product installation drawing

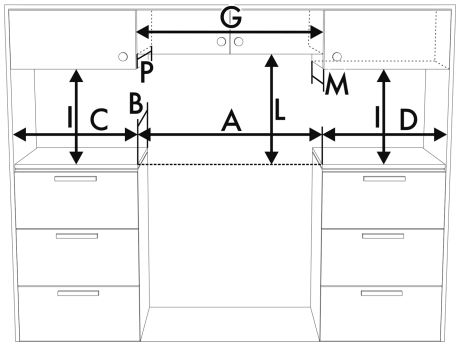

A	24"	610 mm
B	25″	630 mm
C[1]	see user manual	
D[1]		
G[2]	24"	610 mm
I[3]	18"	457 mm
L	see user manual	
M[4]	13"	330 mm
P[4]	13"	330 mm

Accessories

GRM

Coffee machine support

GT3T

Total-extraction telescopic guides

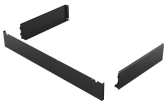

KITTKSPR36

Plinth, 3 sides, 900mm , SPR

PALPZ

Pizza shovel with fold away handle

PPR9

Refractary pizza stone without handles

WOKGHU

Cast-iron wok support