24 INCH PROFESSIONAL GAS RANGE

SRG2401/SRG2401LP

Product: 24 Inch Professional Gas Range
Model Number: SRG2401/SRG2401LP

TECHNICAL DETAILS

Fuel Type	Natural Gas / LP
Installation Type	Freestanding
Burner Type	Sealed Burners
Type of grate	Continuous
Watts (W) / Max BTU	18000BTU
Amperage or Current (A)	10A
Volts (V)	120V
Frequency (Hz)	60Hz
Control Type	Knob
Plug Type	US 3-prong
Power Cord Length (in.)	59"

COOKTOP PERFORMANCE

Total Number Of Cooktop Burners	4
(1) Front Left Burner (BTU)	9000BTU
(2) Rear Left Burner (BTU)	9000BTU
(3) Front Right Burner (BTU)	18000BTU
(4) Rear Right Burner (BTU)	3500BTU

FEATURES & BENEFITS

- **Cast-Iron Cooking Grates:** Heavy-duty cast-iron cooking grates provide exceptional durability and stability, supporting cookware of various sizes while ensuring even heat distribution.
- **Four-Burner Versatility:** Designed for flexible cooking performance, this rangetop features an 18,000 BTU power burner for fast boiling and searing, plus a 3,500 BTU burner that provides reliable control for a variety of cooking tasks.
- **Convection Fan:** Built-in convection fan circulates hot air evenly throughout the oven for faster, more consistent cooking results.
- **Oven On Indicator Light:** A convenient indicator light clearly shows when the oven is operating, providing added awareness and ease of use.
- **Heavy-Duty Metal Control Knobs:** Commercial-style metal control knobs offer lasting durability, precision control, and a premium professional appearance.
- **3.7 cu. ft. Oven Capacity:** 3.7 cu. Ft. oven capacity accommodates multiple dishes, providing ample cooking space while maintaining a compact 24-inch design.
- **Brilliant Black Porcelain Interior:** The sleek black porcelain oven interior enhances heat retention while adding a bold, high-end finish to your range.

Specifications subject to change without notice.

24 INCH PROFESSIONAL GAS RANGE

SRG2401/SRG2401LP

OVEN PERFORMANCE

Oven Capacity (cu. Ft.)	3.7 cu. ft.
Oven Control Features	Oven light, Convection fan
Cooking Modes	Bake, Broil
Bake Burner Power	12000BTU
Broil Burner Power	10000BTU
Convection	Yes
Oven Lights	Yes
Oven Racks (Standard)	2
Oven Rack Material	Chrome Plated
Baking Sheet Size	Fits 18" x 13" Baking sheet
Oven Internal Width	19-1/4"
Oven Internal Depth	17-1/2"
Oven Internal Height	21"

PRODUCT DIMENSIONS & WEIGHTS

Product Dimensions (WxDxH) (in.)	23-7/8" x 27-1/4" x 37-1/4"
Product Height (from bottom to top of back splash) (in.)	36-1/4" - 37-1/4"
Product Height (from bottom to top of side panel) (in.)	34-3/8"- 35-3/8"
Product Depth (from back panel to bullnose) (in.)	27-1/4"
Product Depth (from back panel to control panel) (in.)	26-1/4"
Product Depth (from back panel to side panel front) (in.)	23-3/4"
Cutout Dimensions (WxDxH) (in.)	24" x 26" x 36"
Adjustable Leg Sizes	1"
Storage Drawer	Yes
Net Weight (lbs.)	126
Gross Weight (lbs.)	161
Package Dimensions (WxDxH) (in.)	26" x 29-1/8" x 39-3/4"

ACCESSORIES INCLUDED

2 Standard Racks
Power Cord

ACCESSORIES (OPTIONAL)

LPKSRG2401
NGKSRG2401

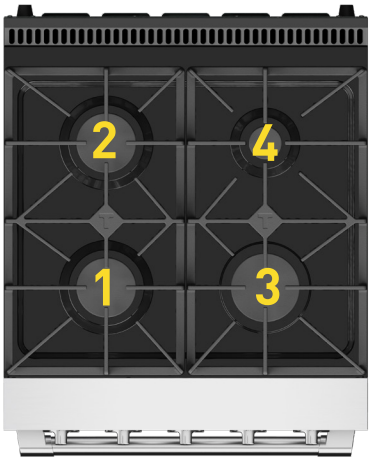

Specifications subject to change without notice.

24 INCH PROFESSIONAL GAS RANGE

SRG2401/SRG2401LP

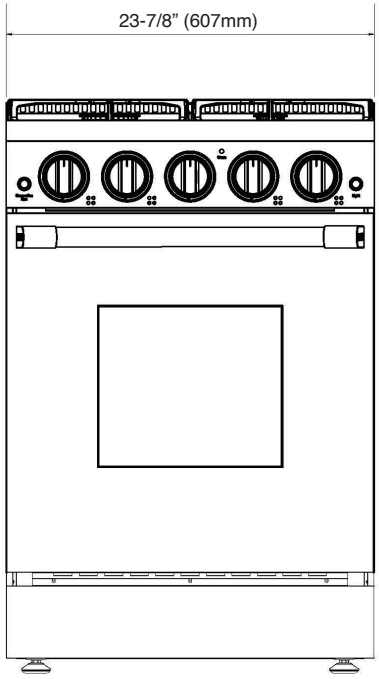

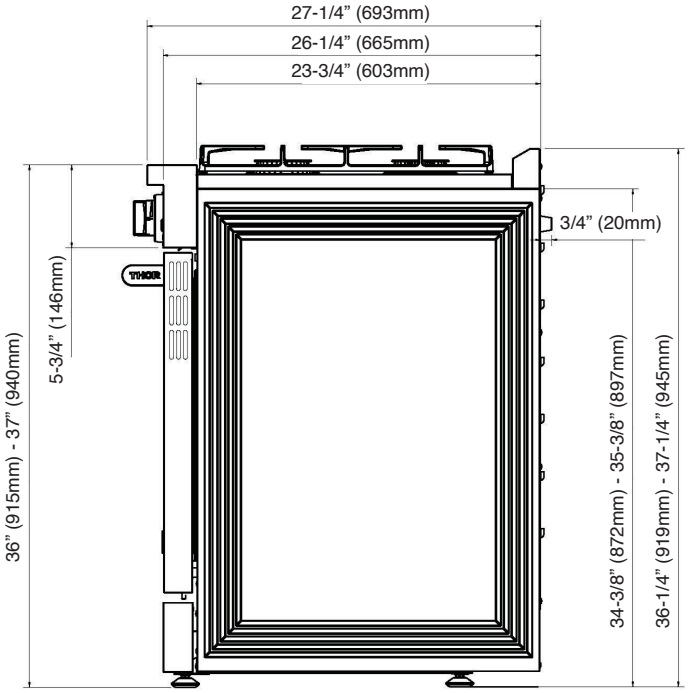

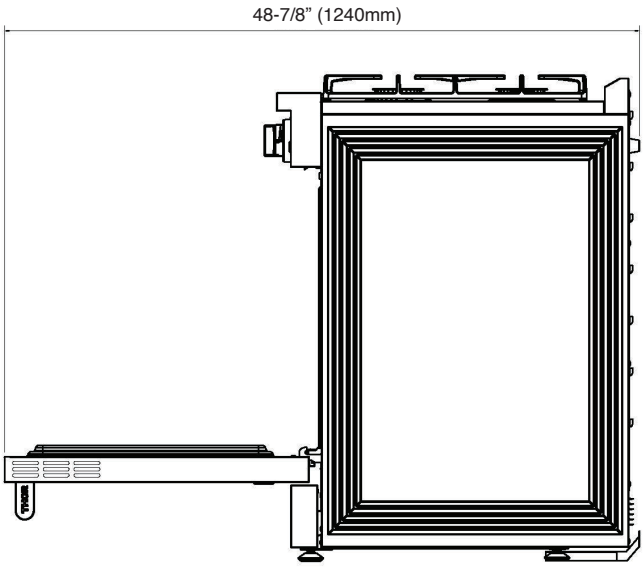

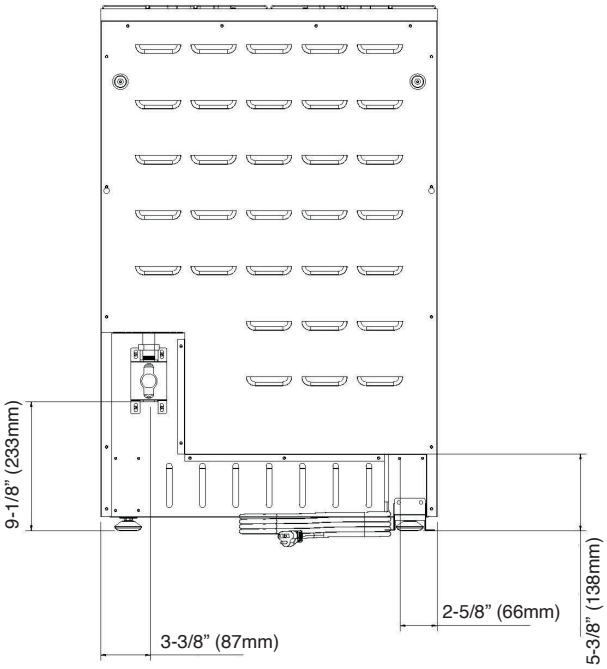

Specifications subject to change without notice.

REV.082026