PRW24C02CPG

Presrv™ Dual Zone Panel Ready Wine Cooler

ZEPHYR

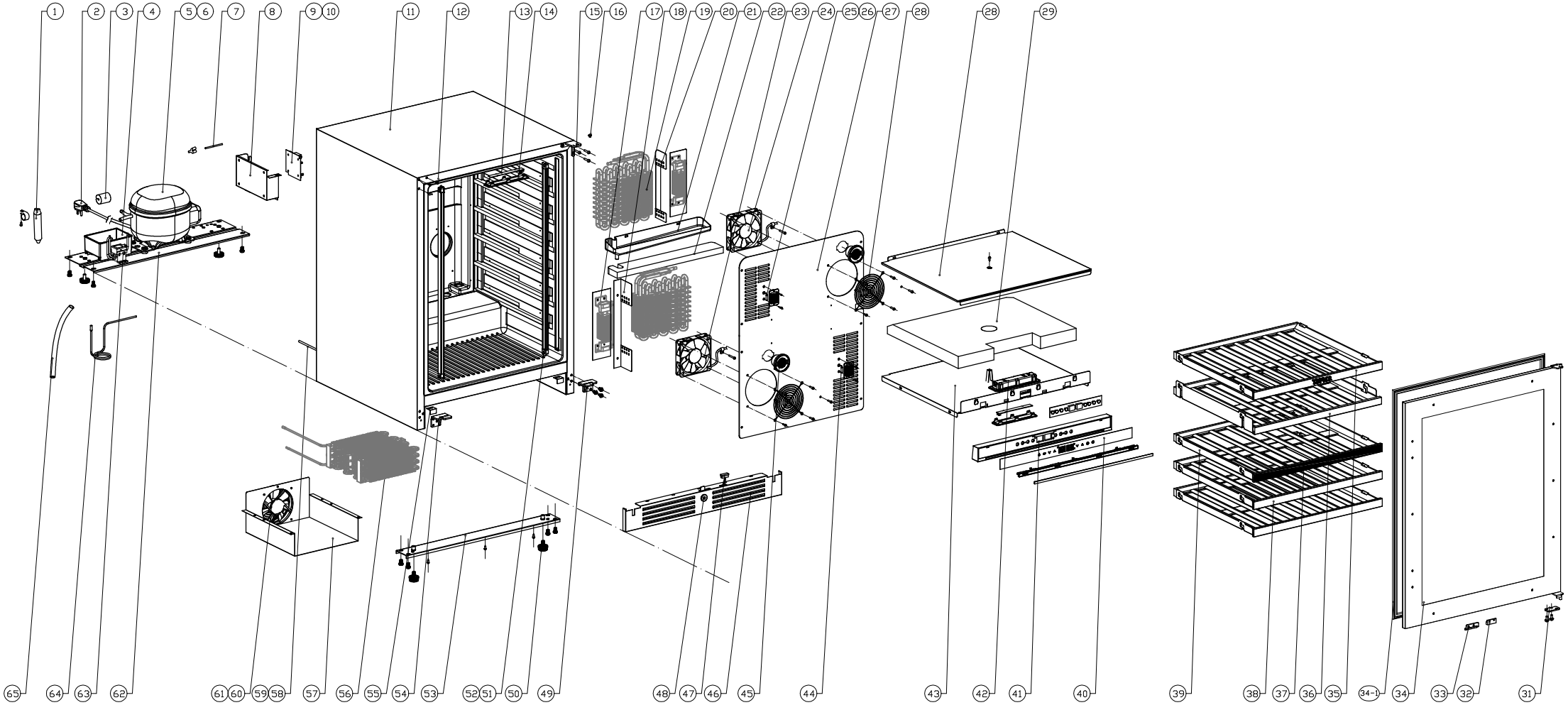

ZEPHYR

Presrv™

PRW24C02CPG

Ref #	Part #	Description	Qty.
1	56300004	Dryer Filter	1
2	11030118	Power Cord	1
3	56220051	Anti Vibration Gasket	2
4	56130035	Drip Tray	1
5	12160006	Compressor	1
6	11030119	Compressor Ground Wire	1
7	11030120	Wire Connector	1
8	56200105	Main Control Board Box	1
9	11010167	Main Power Control Board	1
10	11010168	Display Control Board	1
12	56210116	Decorative Hole Cover	3
13	12010018	Tri Color LED	2
14	52150017	LED Light Cover	2
15	54180036	Upper Right Hinge	1
16	01020042	Hinge Screw	1
17	54280008	Heater	2
18	52120003	Evaporator Wind Deflector, Lower	1
19	54240004	Evaporator	2
20	52120004	Evaporator Wind Deflector, Upper	1
21	56130028	Drip Tray	1
22	56180017	Foam	1
23	12130040	Fan, Lower Zone	1
24	12130028	Fan, Upper Zone	1
25	54210014	Temperature Sensor Cover	2
26	11050007	Temperature Sensor, Upper Zone	1
27	54170029	Rear Internal Panel	1
28	54210017	Fan Cover	2
29	54170030	Air Duct Board Top	1

30	56180022	Foam	1
31	54190079	Door Axis Plate	1
32	54220011	Magnet	1
33	54050090	Lock Plate	1
34	50230031	Door	1
34-1	56220047	Door Gasket	1
35	50150054	Sliding Wooden Shelf Assembly	1
36	50150055	Sliding Wooden Shelf Assembly	1
37	50150056	Sliding Wooden Shelf Assembly	1
38	50150057	Sliding Wooden Shelf Assembly	2
39	50320040	Shelf Slider Rails, Set	5
40	52050029	Display Panel Decal	1
41	56200123	Display Box	1
42	54140344	LED Light Holder	1
43	54170031	Air Duct Board Bottom	1
44	11050009	Temperature Sensor, Lower Zone	1
45	Z0F-C004	Carbon Filter	2
46	50260019	Kick Plate	1
47	11040033	Magnet Switch	1
48	50180010	Door Lock	1
49	54180037	Lower Right Hinge	1
50	50350008	Leveling Leg	4
51	12010019	LED Light Strip	2
52	01020065	LED Light Screw	4
53	54140284	Cabinet Bracket	1
54	54180038	Lower Left Hinge	1
55	54140289	Cabinet Bracket	2
56	54270001	Condensor	1
57	54210015	Condensor Cover	1
58	50330029	Capillary Tube, Lower Zone	1
59	50330015	Capillary Tube, Upper Zone	1
60	54210016	Fan Cover	1

61	12130032	Fan	1
62	54190058	Compressor Support Plate	1
63	56060005	Electromagnetic Valve	1
64	50330020	Connecting Pipe	1
65	50330034	Exhaust Water Pipe	1
66-1	54180039	Upper Left Hinge	1
66-2	56210116	Decorative Hole Cover	3
66-3	54190065	Upper Left Hinge Connecting Plate	1
66-4	54190066	Lower Left Hinge Connecting Plate	1
66-5	01020026	Screw, Top Hinge, M4x12	7
66-6	01020055	Screw, ST4*30, Self Tapping	10
66-7	01020054	Screw, M4x40mm, Door Handle	2
66-8	02170014	Washer, Door Handle Screw	2
66-9	15000019	Door Lock Key	1

JAN23.0101